MM571W
MM572W

Installation Manual

(For a single or dual gate installation)

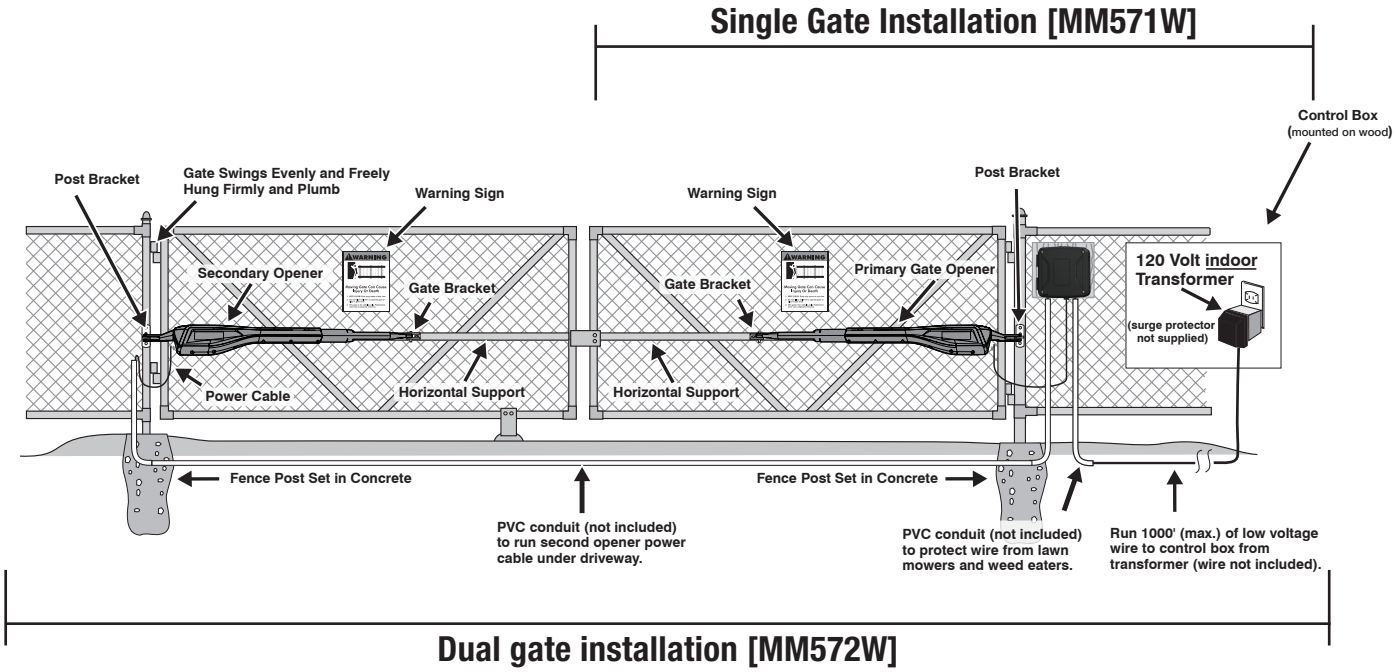

Example of Dual Gate finished installation

(Installations vary slightly on different types of gates)

c UL us LISTED This product meets the requirements of UL325, the standard for gate operator safety.

Mighty Mule® is the retail brand of Nortek Security & Control, LLC

NORTEK CONTROL

⚠ WARNING ⚠

DO NOT SPLICE ANY POWER WIRES!

DO NOT MODIFY THE BATTERY HARNESS!

THIS WILL VOID YOUR MANUFACTURER'S WARRANTY.

Low voltage wire for transformer not included.

⚠ WARNING

This equipment meets Underwriters Laboratory Standard 325 (UL 325). However, gate equipment has hazards associated with its use and therefore by installing this product the installer and user accept full responsibility for following and noting the installation and safety instructions. Failure to follow installation and safety instructions can result in hazards developing due to improper assembly. You agree to properly install this product and that if you fail to do so Nortek Security & Control, LLC, shall in no event be liable for direct, indirect, incidental, special or consequential damages or loss of profits whether based in contract tort or any other legal theory during the course of the warranty or at any time thereafter. The installer and/or user agree to assume responsibility for all liability and use of this product releasing Nortek Security & Control, LLC, from any and all liability. If you are not in agreement with this disclaimer or do not feel capable of properly following all installation and safety instructions you may return this product for full replacement value.

READ ALL INSTRUCTIONS CAREFULLY AND COMPLETELY before attempting to install and use this automatic gate operator. This gate operator produces a high level of force. Stay clear of the unit while it is operating and exercise caution at all times.

ALL AUTOMATIC GATE OPERATORS ARE INTENDED FOR USE ON VEHICULAR GATES ONLY.

Product Usage

The Mighty Mule Gate Operator meets all of the safety requirements of a **Class I** Residential Vehicular Gate Operator and is intended for use solely with vehicular swing gates in single-family residential applications that meet the Class I category listed in the table below.

Vehicular Gate Operator Class Categories

Residential Vehicular Gate Operator-Class I:
A vehicular gate operator (or system) intended for use in garages or parking areas associated with a residence of one-to-four single families.

Commercial/General Access Vehicular Gate Operator-Class II:
A vehicular gate operator (or system) intended for use in a commercial location or building such as a multi-family housing unit (five or more single family units), hotel, garages, retail store, or other buildings accessible by or servicing the general public.

Industrial/Limited Access Vehicular Gate Operator–Class III:
A vehicular gate operator (or system) intended for use in an industrial location or building such as a factory or loading dock area or other locations not accessible by or intended to service the general public.

Restricted Access Vehicular Gate Operator – Class IV:
A vehicular gate operator (or system) intended for use in an industrial location or building such as a factory or loading dock area or other locations not accessible by or intended to service the general public.

Table of Contents

Please Read This First! 2

Important Safety Information 3
- Manually Opening and Closing Gate 3
- For the Installer and End User 4
- Installing Warning Signs and Pedestrian Gates 8
- Required Safety Precautions for Gates 9

Technical Specifications 10
- Mighty Mule 571W/572W Gate Opener 10
- Powering Options 11
- Solar Panel and Gate Activity Chart 11

Before You Begin 11
- Check Existing Gate Size and Material 12
- IMPORTANT: Check for Proper Gate Installation 12
- Items Included for Primary Gate Opener Installation (MM571W) 13
- Items Included for Secondary Opener Installation (MM572W) 13
- Tools Needed 14
- Items Not Included 14
- Check Direction of Gate Swing 14

Mechanical Installation 15
- Assessing the Gate for Installation 15
- Pull-to-Open Operator Mounting (Most Common) 16
- Installing the Closed Position Stop Plate / Pull-to-Open 21
- Push-to-Open Operator Mounting 24
- Installing the Closed Position Stop Plate / Push-to-Open 29
- Control Box Installation 30
- Connecting the Operator(s) and battery 32
- Connecting the Operator(s) and battery 33
- Transformer or Solar panel wiring Installation 34
- Transformer or Solar panel wiring Installation 35

Electrical Installation and Setup 37
- Dip Switches settings 37
- Transmitter Programming 38
- Closed Limit Programming - Pull to Open 39
- Closed Limit Programming - Push to Open 41
- Dual Sense Stall Force Setting 43
- Auto Close Setting 44

Optional Smart Control Setup 44

Connecting Additional Devices 45
- Control Board Connections 46
- Connecting Accessories 47

Maintenance 48

Troubleshooting Guide - Audible Feedback 49

Troubleshooting Guide - Visual Feedback 51

Repair Service 53

Accessories 54

Appendix A 56
- Accessory Installation Instructions 56

Gate Operator Installation Checklist 57

Please Read This First!

Thank you for purchasing a Mighty Mule Gate Operator—Nortek Security & Control's "do-it-yourself" automatic gate operator! When correctly installed and properly used, your Mighty Mule Gate Operator will give you many years of reliable service. Please read the following information to ensure you have the correct system for your particular needs. If so, this manual and will enable you to properly install your Mighty Mule Gate Operator.

The Mighty Mule Gate Operator is designed for installation for single or dual gates. The gate(s) must not exceed 18 feet in length or weigh more than 850 pounds (please see Technical Specifications on page 10). The Mighty Mule Gate Operator can be used on vinyl, aluminum, chain link, farm tube, and wrought iron gates.

⚠ Not rated for use on solid surface gates due to the potential to damage the operator and/or injure someone.

The Mighty Mule Gate Operator accommodates extra transmitters, digital keypads, solar panels, push buttons, automatic gate locks, and other access control products. These optional accessories (see the Mighty Mule Accessory Catalog) are available at most stores. Your store should be able to special order any accessory not in stock.

If your store cannot special order accessories, please call the Mighty Mule Sales Department (800-421-1587).

The Mighty Mule Gate Operator features Dual Sense Technology™. This feature makes the gate stop and reverse direction when it comes in contact with an obstruction.

The Mighty Mule Gate Operator also has an adjustable auto-close feature. After the gate reaches the fully open position, it can be set to remain open up to 120 seconds before automatically closing. Pressing the transmitter button at any time after the gate opens fully will cause it to close immediately. OFF is the factory setting; meaning the gate will stay open until you press the transmitter (or keypad, etc.) again.

Go to www.linearproaccess.com for a dealer or retailer near you or call 800-421-1587 for information about our Linear professional line of gate operators and accessories. Our Sales Department will be glad to give you the name and phone number of a Linear dealer near you.

BEFORE YOU BEGIN TO INSTALL YOUR AUTOMATIC GATE OPERATOR:
Read these instructions carefully to become familiar with all parts and installation steps.
The video is only designed as an overview of the installation procedure.
You must read the installation manual for detailed instructions
on gate operator safety and proper use of the gate operator.

MIGHTY MULE®

NOT FOR THE CONTAINMENT OF ANIMALS.

Important Safety Information

Because automatic gate operators produce high levels of force, consumers need to know the potential hazards associated with improperly designed, installed, and maintained automated gate operator systems. ***Keep in mind that the gate operator is just one component of the total gate operating system.*** Each component must work in unison to provide the end user with convenience, security, and safety.

This manual contains various safety precautions and warnings for the installer and end user. Because there are many possible applications of the gate operator, the safety precautions and warnings contained in this manual cannot be completely exhaustive in nature. It does, however, provide an overview of the safe design, installation, and use of this product. **CAREFULLY READ AND FOLLOW ALL SAFETY PRECAUTIONS, WARNINGS, AND INSTALLATION INSTRUCTIONS TO ENSURE THE SAFE SYSTEM DESIGN, INSTALLATION, AND USE OF THIS PRODUCT.**

⚠ Warnings in this manual are identified with this warning symbol. The symbol identifies conditions that can result in damage to the operator or its components, serious injury, or death.

Because Mighty Mule automatic gate operators are only part of the total gate operating system, it is the responsibility of the installer and end user to ensure that the total system is safe for its intended use.

MANUALLY OPENING AND CLOSING GATE

CAUTION

The gate will move freely and uncontrolled when the gate operator is removed from the gate.
ONLY disconnect the operator when the control box power switch is OFF and the gate is NOT moving.

Disconnecting the Operator

1. Turn control box power switch OFF.
2. Remove the hairpin clip and clevis pin.
3. Remove the operator's front mount from the gate bracket.

The gate can be opened and closed manually when the operator is disconnected.

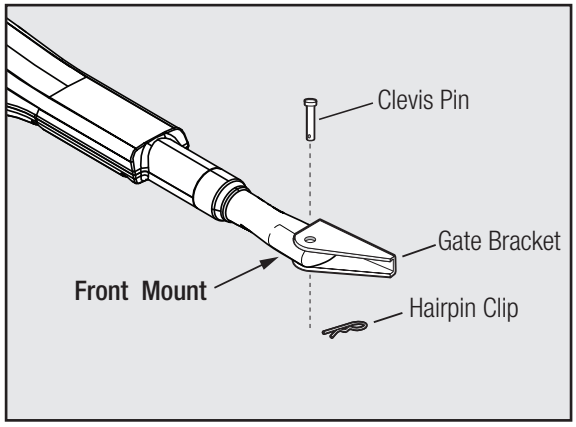

NOTE: Substitute a **Pin Lock** for the clevis pin on the front mount of the gate operator to prevent theft of the operator from the gate (*see accessory pages in back of this book).*

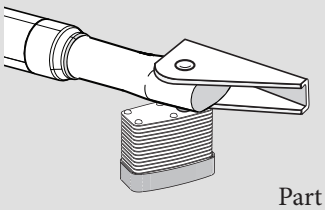

Part #: FM133

Important Safety Information

FOR THE INSTALLER AND END USER

⚠ WARNING

To reduce the risk of injury or death:

1. READ AND FOLLOW ALL INSTRUCTIONS.
2. Never let children operate or play with gate controls. Keep the remote control away from children.
3. Always keep people and objects away from the gate. NO ONE SHOULD CROSS THE PATH OF THE MOVING GATE.
4. Test the gate operator monthly. The gate MUST reverse on contact with a rigid object or stop when an object activates the non-contact sensors. After adjusting the force or the limit of travel, retest the gate operator. Failure to adjust and retest the gate operator properly can increase the risk of injury or death.
5. Use the manual/emergency release only when the gate is not moving.
6. KEEP GATES PROPERLY MAINTAINED. Read the user's manual. Have a qualified service person make repairs to gate hardware.
7. The entrance is for vehicles only. Pedestrians must use separate entrance.
8. The gate must be installed in a location that provides adequate clearance between it and adjacent structures when opening and closing to reduce the risk of entrapment. Swinging gates must not open into public access areas.
9. SAVE THESE INSTRUCTIONS.

I. Before Installation

1. Verify this operator is proper for the type and size of gate, frequency of use and class of the gate system.
2. Make sure the gate has been properly installed and swings freely in both directions. Repair or replace all worn or damaged gate hardware prior to installation. A freely moving gate will require less force to operate and will enhance the performance of the entrapment protection devices used with the system (see page 7).
3. Review the operation of the system to become familiar with its safety features. Understand how to disconnect the operator for manual gate operation (see previous page).
4. The gate and operator installation must comply with any applicable local codes.
5. This gate operator is intended for vehicular gates only. A separate entrance or gate must be installed for pedestrian use (see page 8).
6. Always keep people and objects away from the gate and its area of travel. No one should cross the path of a moving gate.
7. Identify all of the entrapment zones for the type of installation. An entrapment zone is an area around the automatic gate system where a person or object could be caught that increase the risk of injury. Entrapment zones should be eliminated, guarded or protected.
8. When designing a system that will be entered from a highway or main thoroughfare, make sure the gate system is placed far enough from the road to prevent traffic congestion.

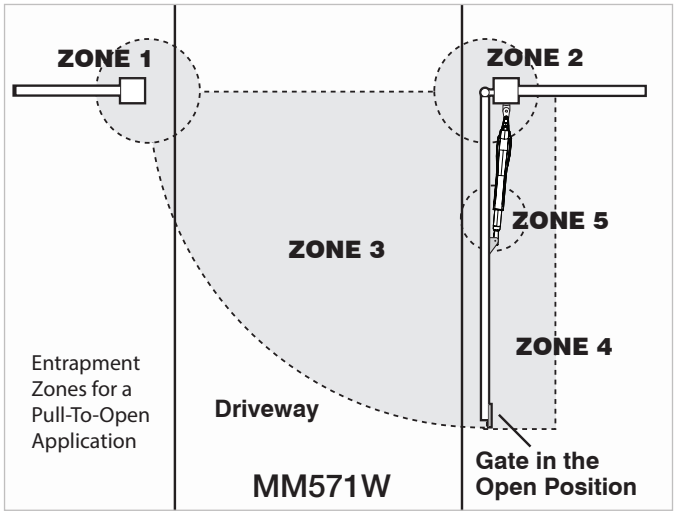

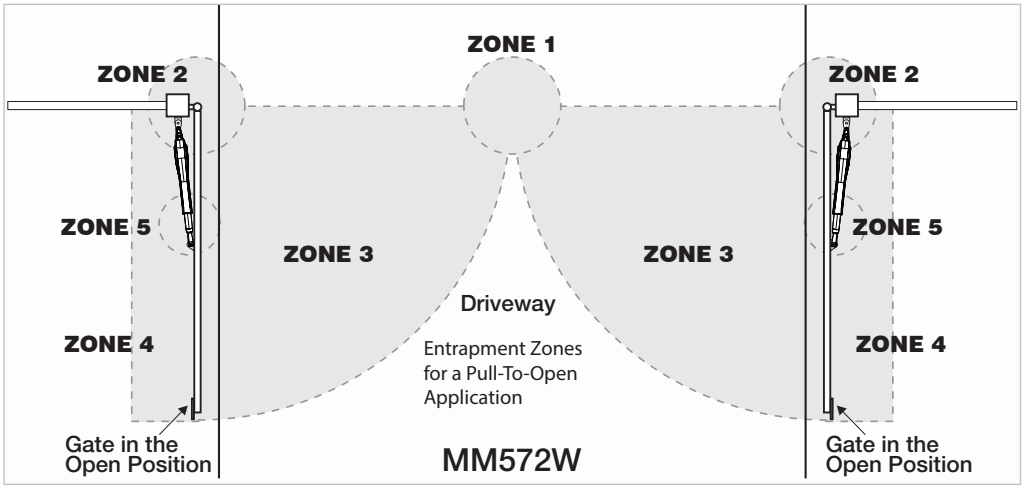

Important Safety Information

FOR THE INSTALLER AND END USER

Typical Entrapment Zones are shown in the diagrams on page 7:

Zone 1 – leading edge of the gate and the fence post.

Zone 2 – between the gate and the gate post.

Zone 3 – the path of the gate.

Zone 4 – the space between the gate in the open position and any object such as a wall, fence, tree, etc.

Zone 5 – pinch points between the operator and gate.

II. During Installation

1. Install the gate operator on the inside of the property and fence line. DO NOT install an operator on the outside of the gate where the public has access to it.
2. Be careful with moving parts and avoid close proximity to areas where fingers or hands could be pinched.
3. Devices such as contact sensors (sensing edges) and non contact sensors (photo beams) provide additional protection against vehicular damage.
4. If push buttons or key switches are installed, they should be within sight of the gate, located at least 10 feet from any moving part of the gate (see diagram below). ***Never install any control device where a user will be tempted to reach through the gate to activate the gate operator.***
5. Secure outdoor or easily accessed gate operator controls in order to prohibit unauthorized use of the gate.

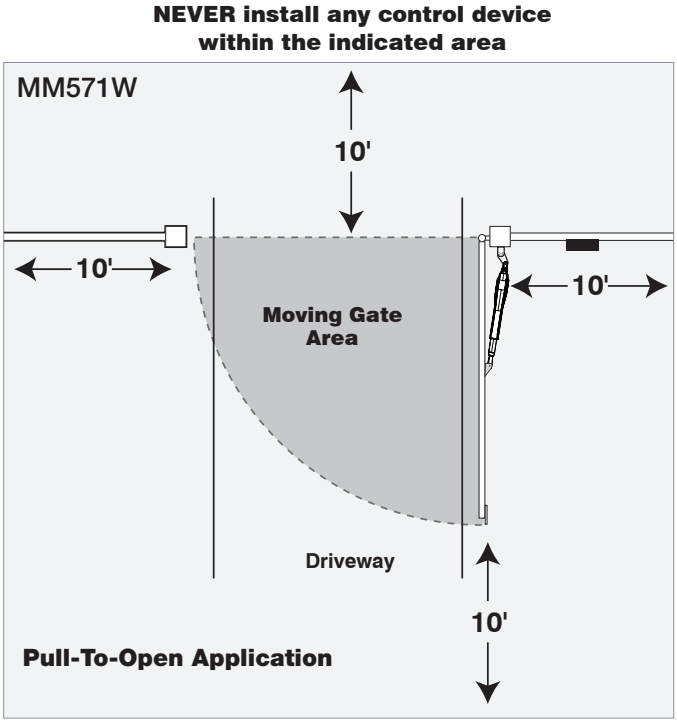

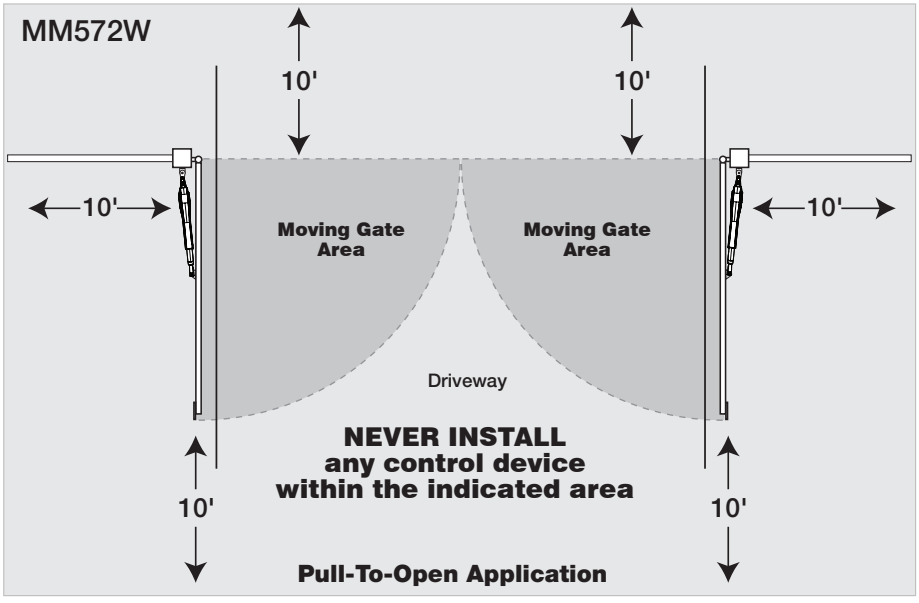

Important Safety Information

FOR THE INSTALLER AND END USER

III. After Installation

1. Attach the **warning signs** (included) to each side of the gate to alert the public of automatic gate operation. It is your responsibility to post warning signs on both sides of your gate. If any of these signs or warning decals becomes damaged, illegible, or missing, replace them immediately. Contact Nortek Security & Control for free replacements.
2. The gate is automatic and could move at any time, posing serious risk of entrapment. No one should be in contact with the gate when it is moving or stationary.
3. Do not attempt to drive into the gate area while the gate is moving; wait until the gate comes to a complete stop.
4. Do not attempt to "beat the gate" while the gate is closing. This is extremely dangerous.
5. Do not allow children or pets near your gate. **Never let children operate or play with gate controls.** Keep the remote control away from children and unauthorized users; store controls where children and unauthorized users do not have access to them.
6. **KEEP GATE SYSTEMS MAINTAINED.** Always turn power to operator OFF before performing any maintenance. See page 48 for maintenance procedures.
7. To operate this equipment safely, YOU must know how to disconnect the operator for manual gate operation (see page 17). If you have read the instructions and still do not understand how to disconnect the operator, contact the Mighty Mule Service Department.
8. Disconnect the operator **ONLY** when the power is TURNED OFF and the gate is NOT moving.
9. Make arrangements with local fire and law enforcement for emergency access.
10. Distribute and discuss copies of the **IMPORTANT SAFETY INFORMATION** section of this manual with all persons authorized to use your gate.
11. **IMPORTANT:** Save these safety instructions. Make sure everyone who is using or will be around the gate and gate operator are aware of the dangers associated with automated gate systems. In the event you sell the property with the gate operator or sell the gate operator, provide a copy of these safety instructions to the new owner.

    Should you need a replacement manual, a copy can be obtained by downloading one from the Mighty Mule web site (www.mightymule.com), by contacting Nortek Security & Control by calling **800-543-1236** and requesting a duplicate copy.

Important Safety Information

FOR THE INSTALLER AND END USER

Mighty Mule gate operators utilize Dual Sense Technology™ entrapment protection. Dual Sense Technology™ is built into every Mighty Mule and provides redundant methods of entrapment protection for open and close gate directions.

In addition to Dual Sense Technology, every Mighty Mule gate controller has provisions for the connection of additional obstruction detection devices such as sensing edges and photo beams.

These devices may be located where there is an increased risk of obstruction. Refer to the diagram below. One or more edge sensors may be located at the leading edge, bottom edge, and post edge, both inside and outside of a vehicular swing gate system.

Wiring to sensors must be located and arranged so the wiring between the sensor and the gate operator is not subjected to mechanical damage.

A wireless sensor such as one that transmits radio frequency (RF) signals that promote safety shall be located where the transmission of the signals is not obstructed or impeded by building structures, natural landscaping or similar objects.

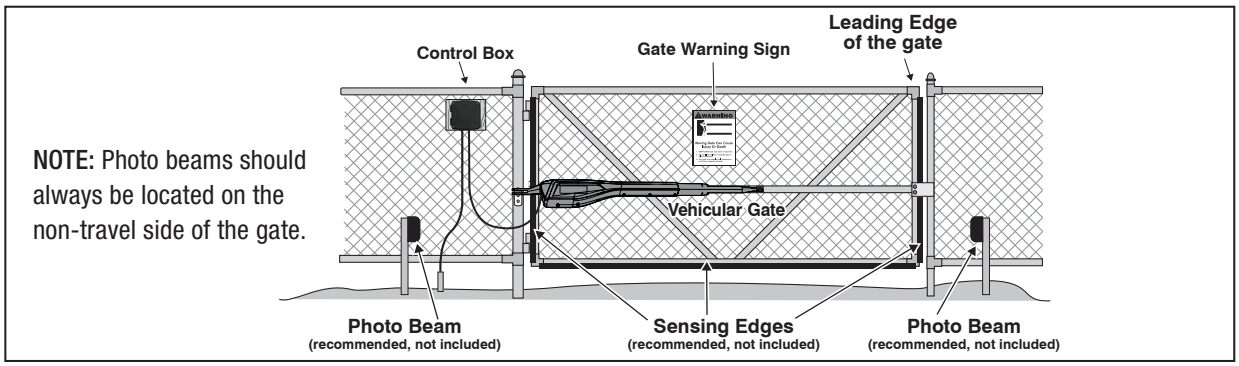

Example of MM571W Installation

(Installations vary slightly on different types of gates)

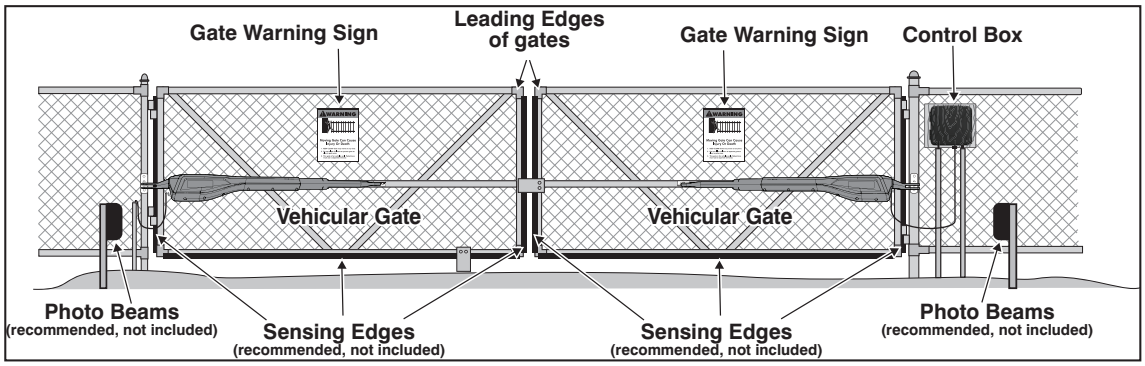

Example of MM572W Installation

(Installations vary slightly on different types of gates)

Note: Photo Beams should always be located on the non-travel side of the gate.

Entrapment and Obstruction Protection

Mighty Mules's Dual Sense Technology™ provides entrapment protection. Since all installations are different, you may need to add photo beams or sensing edges to help prevent damage to vehicle or other items that could be hit by a moving gate.

Entrapment Alarm

The Mighty Mule Automatic Gate Operator is designed to stop and reverse the gate when the gate comes in contact with an obstruction. Additionally, these operators are equipped with an audio entrapment alarm which will activate if the unit obstructs twice while opening or closing. This alarm will sound for a period of 5 minutes, or until the operator receives an intended signal from a hard wired entry/exit source (e.g. push button control or keypad). Turning the power switch on the control box OFF and back ON will also deactivate the alarm. Wireless controls such as transmitters and wireless keypads will not deactivate the alarm.

Important Safety Information

INSTALLING WARNING SIGNS AND PEDESTRIAN GATES

Warning signs alert people of automatic gate operation and are required when installing Mighty Mule Automatic Gate Operators. A minimum of two WARNING SIGNS must be installed in the area of the gate. Each sign is to be visible by persons located on the side of the gate on which the placard is installed.

The operator is intended for installation only on gates used for vehicles. Pedestrians must be supplied with a separate access opening. The pedestrian access opening shall be designed to promote pedestrian usage. Locate the gate such that persons will not come in contact with the vehicular gate during the entire path of travel of the vehicular gate.

We recommend using the Bulldog Pedestrian Gate Lock (Call the Nortek Security & Control Sales Department at 800-421-1587) for controlled access.

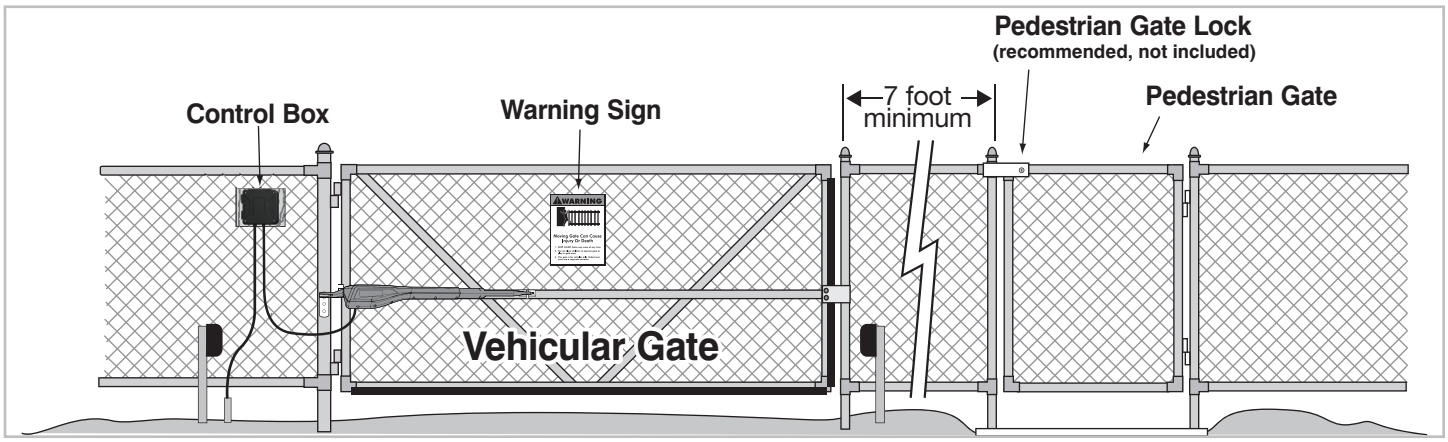

Example of MM571W Installation

(Installations vary slightly on different types of gates)

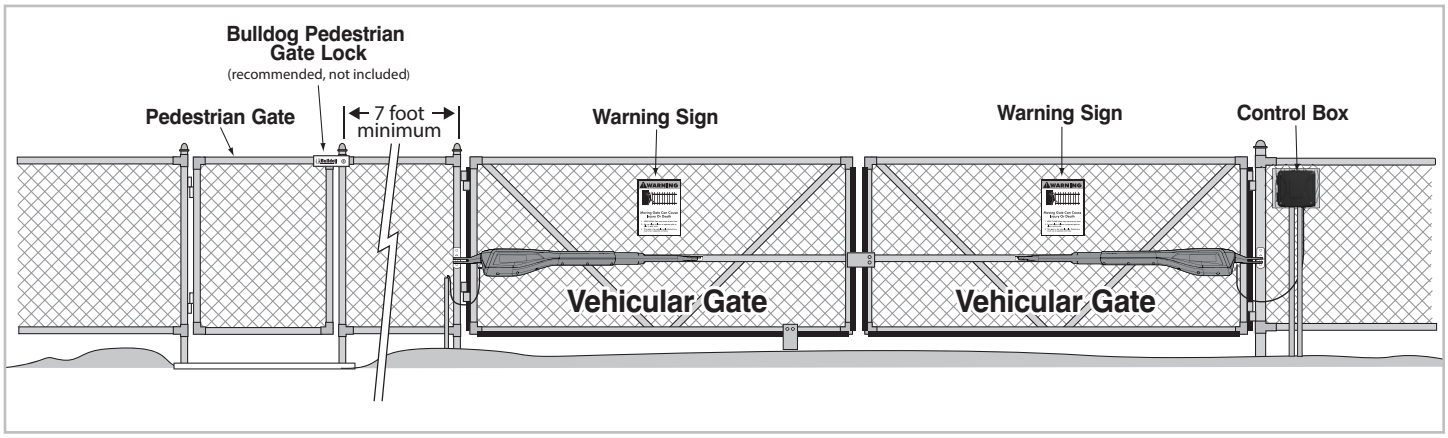

Example of MM572W Installation

(Installations vary slightly on different types of gates)

Warning Signs

The gate operator is provided with two safety warning signs (four signs for dual operator installation). The signs **MUST** be installed on the front and back of the gate where they will be visible in the area of the gate.

Permanently secure each warning sign to the gate.

Immediately replace a damaged, eligible or missing warning sign.

Call Customer Service at 800-421-1587 for a free replacement.

Important Safety Information

REQUIRED SAFETY PRECAUTIONS FOR GATES

These warning labels should be found at the locations specified below. If any of them are missing, immediately contact Nortek Security & Control for replacements.

Labels (1) installed on the front of control box

Technical Specifications

MIGHTY MULE 571W/572W GATE OPENER

DRIVE

- Low friction screw drive (linear actuator) rated for -5 °F to +160 °F (-20 °C to +71 °C).
- Powered by a 12 V motor with integral gear reducer. Motor speed reduced to 348 rpm at 12 V.
- Maximum opening arc of 110°. Approximate opening time (90°): 18 seconds, depending on weight of gate.

POWER

- The system is powered by a 12 Vdc battery (included). A second Mighty Mule battery may be used (not included).
- Battery charger is on the control board and maintained by a 120Vac to 19VDC output transformer or by optional Solar Panels; the panel should generate minimum of 10 Watts (600 mA/20 watt max.). A diode on the control board prevents battery discharge. **IMPORTANT:** Never use *both* transformer and solar panel— this will damage the battery and control board.
- Three (3) Mini blade-style fuses rated for 25A.
- **NOTE: The transformer should not be directly connected to any battery. Do not replace fuses with higher ampere rated fuses; doing so will void your warranty and may damage your control board.**

CONTROL

- Microprocessor-based control board is set for single or dual leaf, pull-to-open or push-to-open installations.
- Control board has temperature compensated circuits.
- Learn based digital transmitter technology provides millions of codes for enhanced security.
- Receiver is tuned to 318 MHz
- Opener length with push-pull tube fully retracted is 40 1/4", mounting point to mounting point. Maximum stroke is 20".
- Adjustable auto-close timer (OFF to 3–120 seconds), and Dual Sense Technology™ stall force.
- Power terminal block accommodates a transformer or solar panels.
- Accessory terminal block fully compatible with all Mighty Mule access controls.
- Control board allows connection of edge sensors and photoelectric sensors.
- Audio entrapment alarm sounds if unit encounters an obstruction twice while opening or closing.

OPERATIONAL CAPACITY

Maximum Weight (lbs.)	Maximum Length (ft.)
850	8
750	10
650	12
550	14
450	16
350	18

NOTE: Ball bearing hinges should be used on all gates weighing over 250 lb.

The Gate Capacity Chart below shows the recommended maximum gate length to weight. The minimum recommended gate length is 5 ft.

Before You Begin

POWERING OPTIONS

1. Determine Charging Option for Battery: Transformer OR Solar

NEVER USE TRANSFORMER AND SOLAR PANEL(S) AT THE SAME TIME. It will damage the control board.

IMPORTANT:

- The transformer is designed for indoor use. If the transformer can be plugged only into an outside electrical outlet, a weatherproof cover/housing (available at local electrical supply stores) must be used.
- If your gate is more than 1000 ft. from an AC power source, you will need to use at least 10 watt solar charging power to charge the battery [FM123]. Refer to the Solar Panel and Gate Activity chart below.
- All low voltage wire used with the Mighty Mule gate operator must be 16 gauge dual conductor, stranded, direct burial wire [RB509]. Do not run more than 1000 ft. of wire.

*** If the gate operator controller is OFF, the system will NOT charge the battery.**

SOLAR PANEL AND GATE ACTIVITY CHART

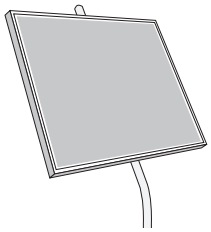

The table and map illustrate the maximum number of gate cycles to expect per day in a particular area when using from 10 to 30 watts of solar charging power prior to the battery depleting to a state where the unit will not function. The figures shown are for winter (minimum sunlight). Accessories connected to your system will draw additional power from the battery.

Accessories connected to your system will draw additional power from the battery.

A second battery [FM150] is recommended for solar and/or high traffic applications. See the accessory catalog.

Single Gate Winter Ratings	Zone 1	Zone 2	Zone 3
12 v single gate (10 watts) solar charger	8	16	26
12 v single gate (20 watts) solar charger	14	28	38
12 v single gate (30 watts) solar charger	20	44	54

* Power increments are for reference only.

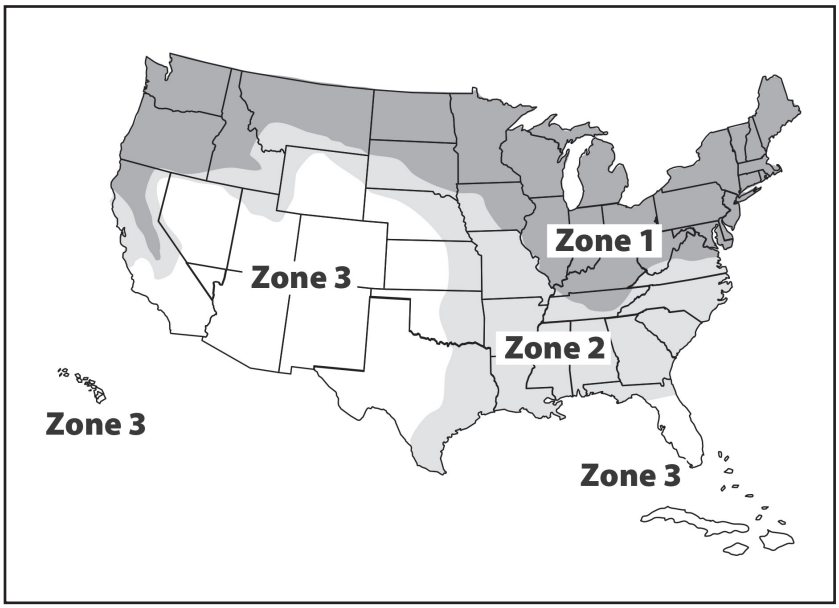

CHECK EXISTING GATE SIZE AND MATERIAL

- Gate size: Up to 18 feet and up to 850 lbs. — See Operational Capacity chart on page 10.

⚠ Not rated for use on solid surface gates.

- Type of gate material: Vinyl, aluminum, chain link, farm tube, wrought iron, wood.

IMPORTANT: CHECK FOR PROPER GATE INSTALLATION

- The gate must be plumb, level, and swing freely on its hinges.
- The gate must move throughout its arc without binding or dragging on the ground.
- Wheels must NOT be attached to the gate.
- Gates over 250 lb. should have ball bearing hinges with grease fittings.
- Post must be secured in the ground with concrete (minimizes twist/flex when the operator is activated).
- Make sure there is a stable area for mounting the gate bracket (this may require the addition of a horizontal or vertical cross member).
- We recommend you position the operator near the center-line of a gate to keep the gate from twisting and flexing, and to avoid back-splash from rain.

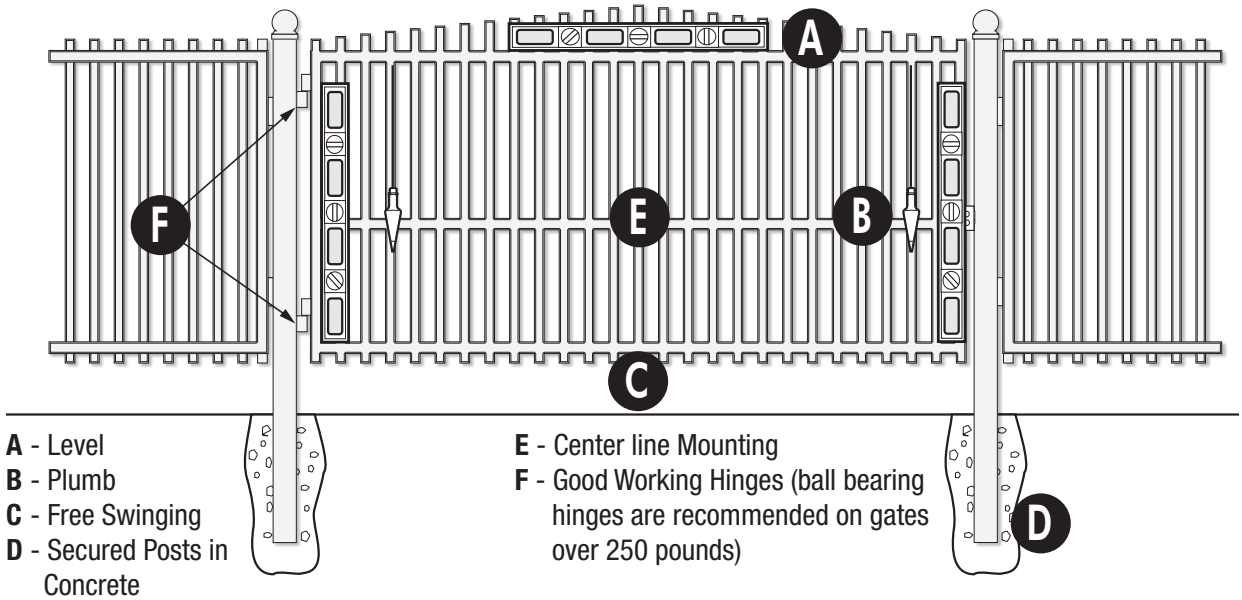

A - Level
B - Plumb
C - Free Swinging
D - Secured Posts in Concrete
E - Center line Mounting
F - Good Working Hinges (ball bearing hinges are recommended on gates over 250 pounds)

Gate Grounding

- For reference only.

Copper Clad Ground Rod (not included)

Use an 8 foot, 5/8 inch ground rod, positioned two feet or less from the post and 2 inches or less above the ground. Available at local home center or hardware stores.

NOTE: No grounding system absolutely protects against lightning strikes. If installed correctly, a grounding system will help minimize damage to your gate operator.

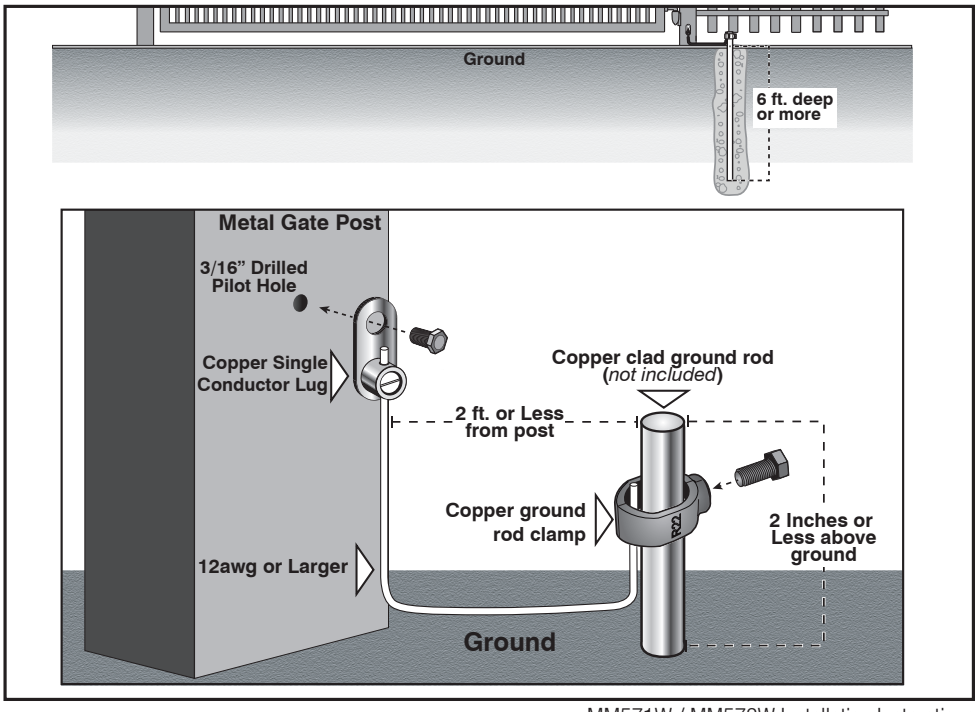

ITEMS INCLUDED FOR PRIMARY GATE OPENER INSTALLATION (MM571W)

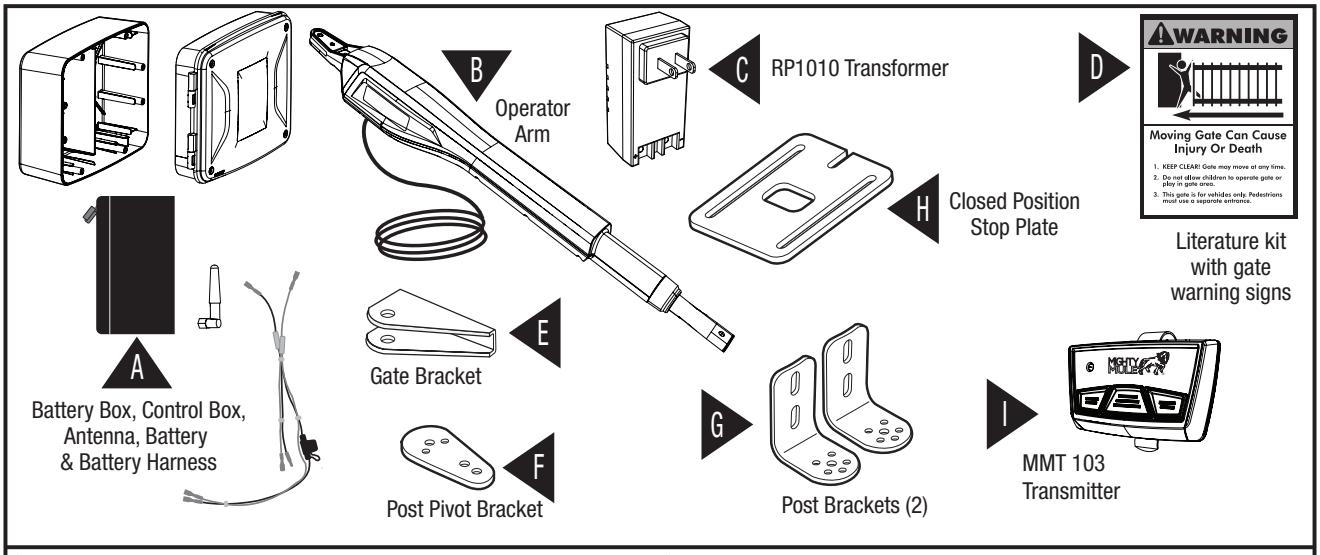

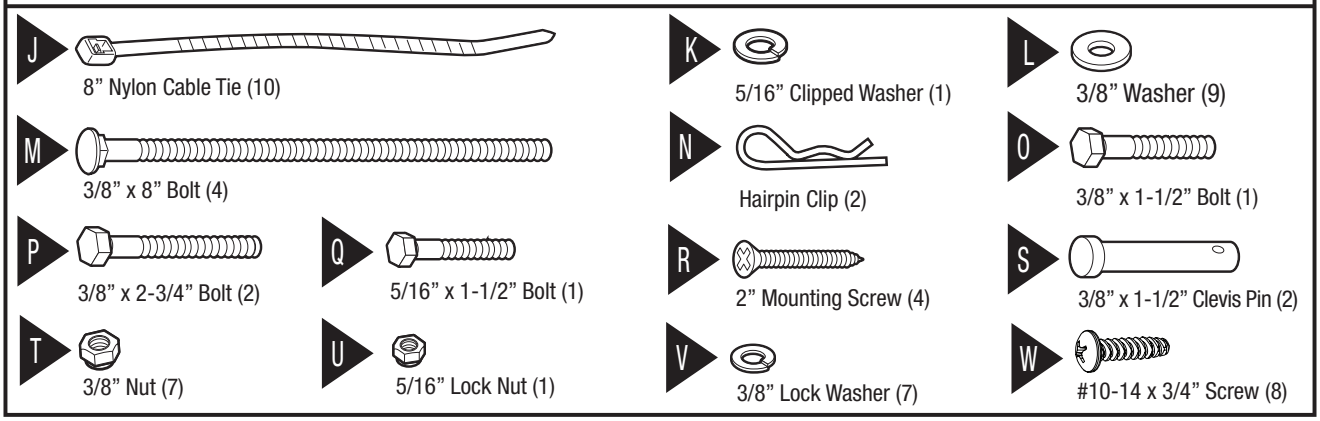

ITEMS INCLUDED FOR SECONDARY OPENER INSTALLATION (MM572W)

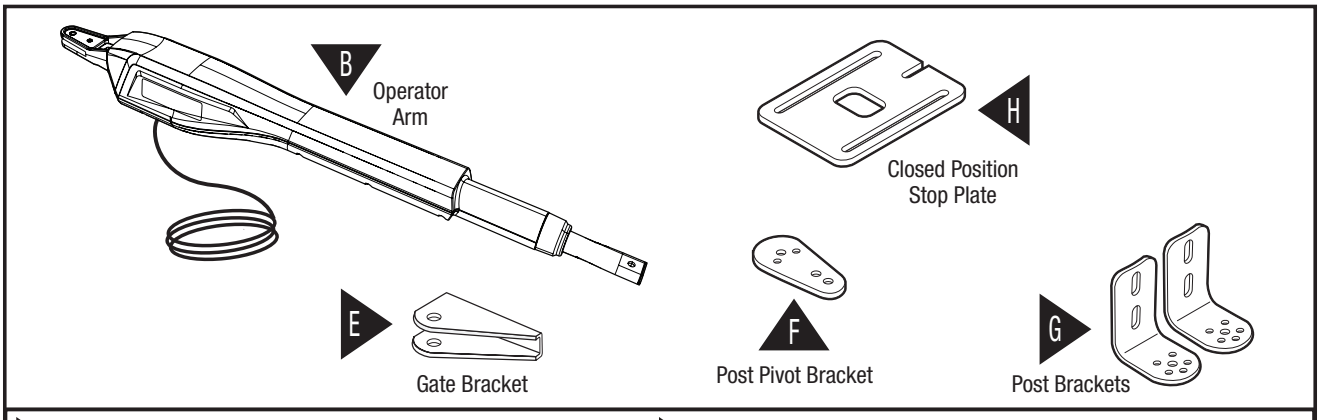

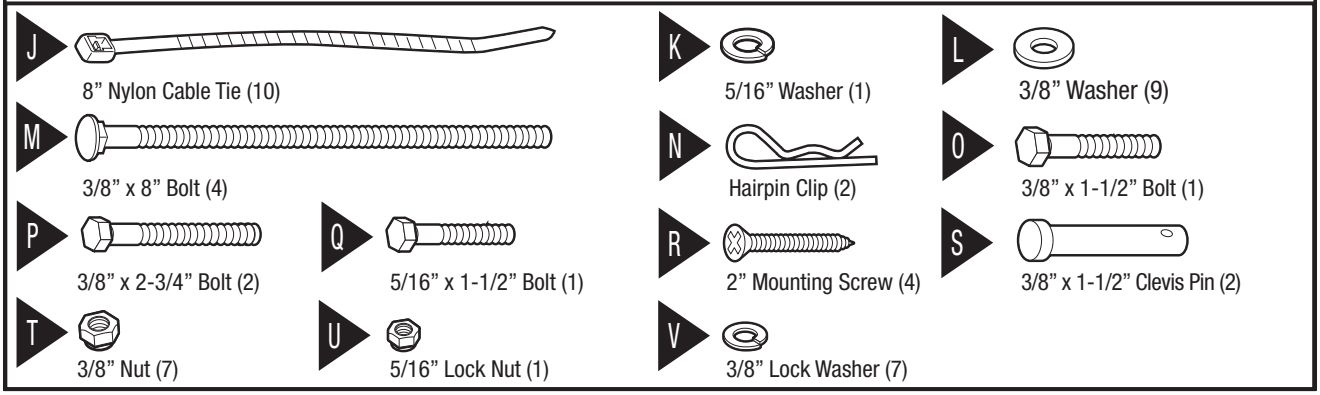

TOOLS NEEDED

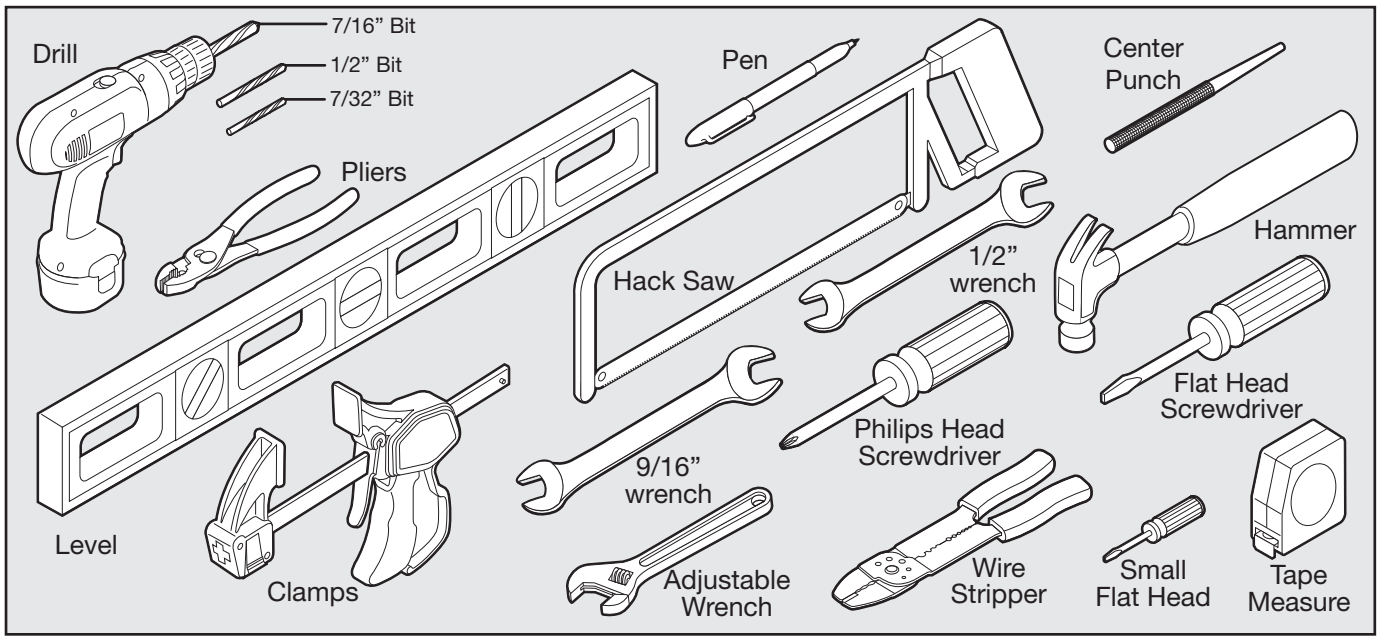

ITEMS NOT INCLUDED

- Low voltage wire will be needed to run from the transformer to the control box; length depends upon the distance between the transformer power supply and the control box. You will need 16 gauge, low voltage direct burial wire. See **Transformer/ Solar Panel Wiring Installation** on page 38 and the accessory catalog.
- PVC conduit.
- If you have thin-walled tube or panel gates, see **Reinforcing Gates for the Gate Brackets**, next page.
- Depending on the type of gate, a horizontal cross member or mounting plate may be needed to mount the front of the operator and gate bracket to the gate. See the **Reinforcing Gates for the Gate Brackets** examples, next page.
- Surge protection for transformer.
- Some types of installations require u-bolts.
- Additional washers or a metal plate may be needed for wooden post.
- Weatherproof cover for outdoor outlet and transformer.
- If the post is larger than 6”, bolts longer than 8” are needed.

CHECK DIRECTION OF GATE SWING

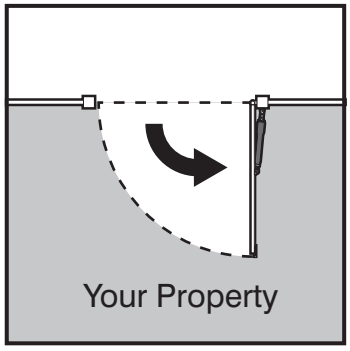

Pull-to-Open Option

Instructions begin on page 2.

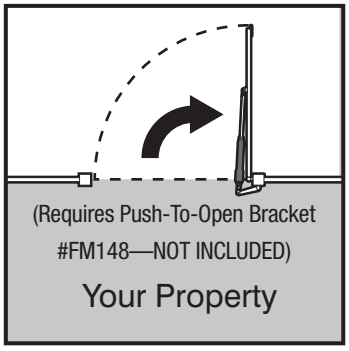

Push-to-Open Option

Instructions begin on page 8.

Mechanical Installation

ASSESSING THE GATE FOR INSTALLATION

Your gate operator can be mounted to a variety of gate types. This section shows some of the most common, along with the reinforcement methods recommended prior to or while mounting your gate operator.

Reinforcing Gates for the Gate Brackets

We recommend using a muffler clamp, wood, or metal, to reinforce thin-walled tube gates, or wood to reinforce panel gates as shown. These reinforcement methods will prevent damage to the opener and gate. Additional hardware may be needed depending on the installation. Additional hardware necessary but not included.

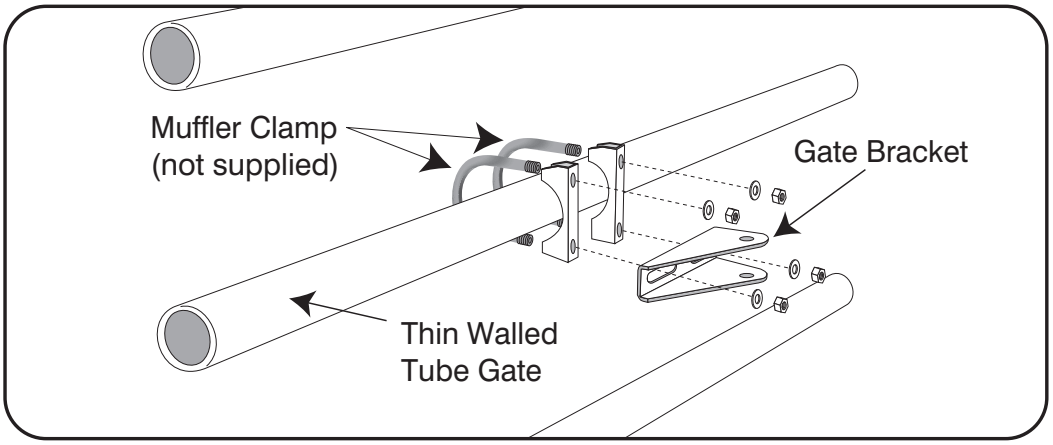

Muffler Clamp for Gate Bracket

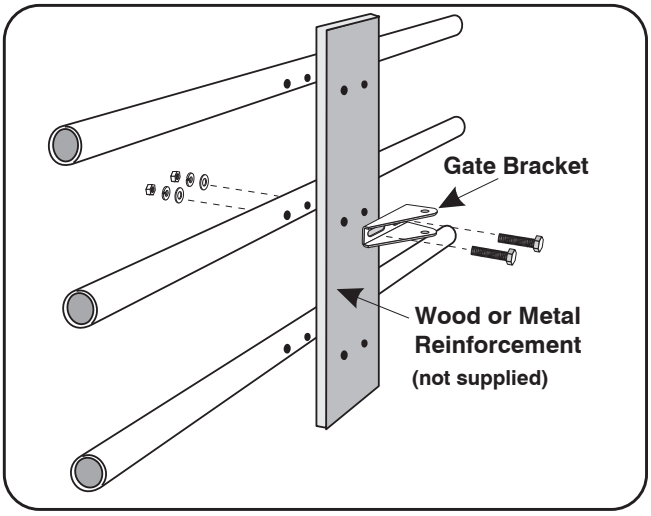

Wood or Metal Reinforcement

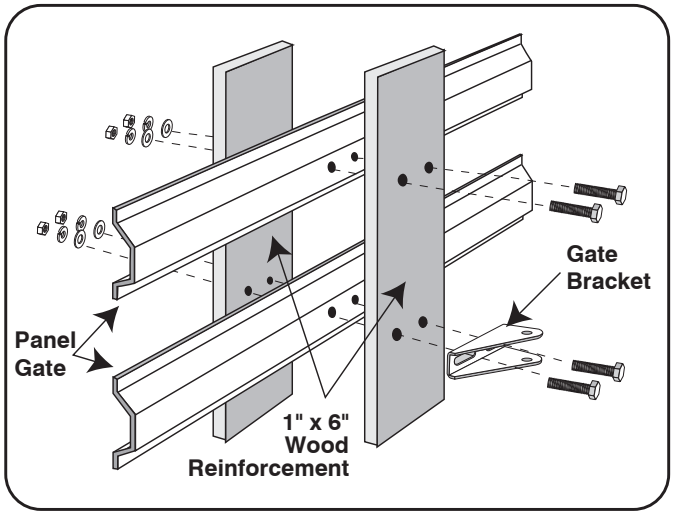

1” x 6” Reinforcement

PULL-TO-OPEN OPERATOR MOUNTING (MOST COMMON)

Step 1

- Assemble the gate post bracket sub assembly as displayed.

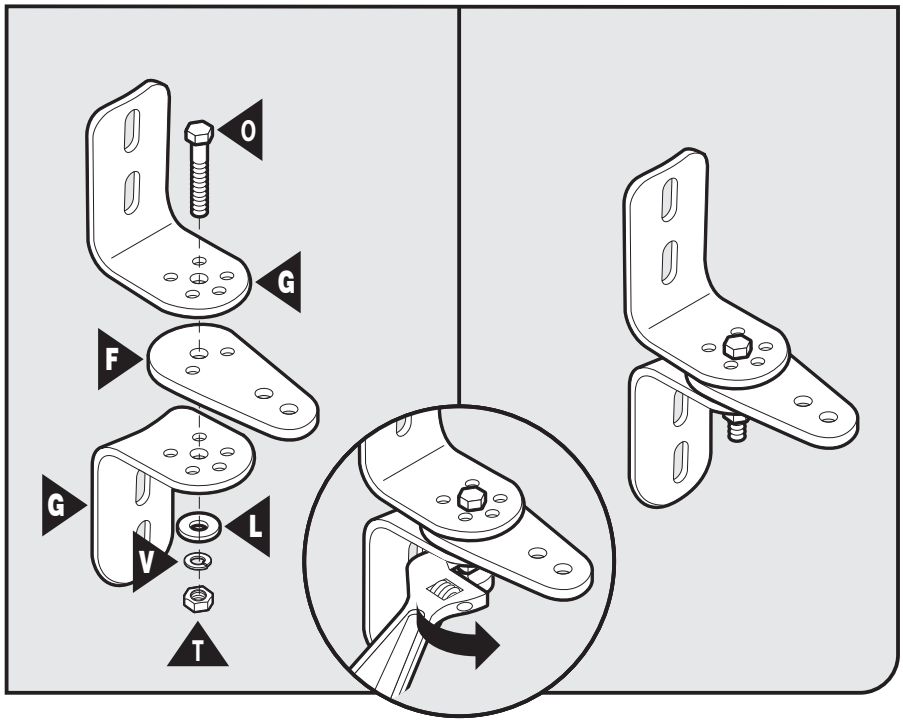

Step 2

- Attach the gate post bracket subassembly and gate bracket to the operator as shown.
- The operator must be retracted with the gate in the open position. Do not spin out the inner cylinder

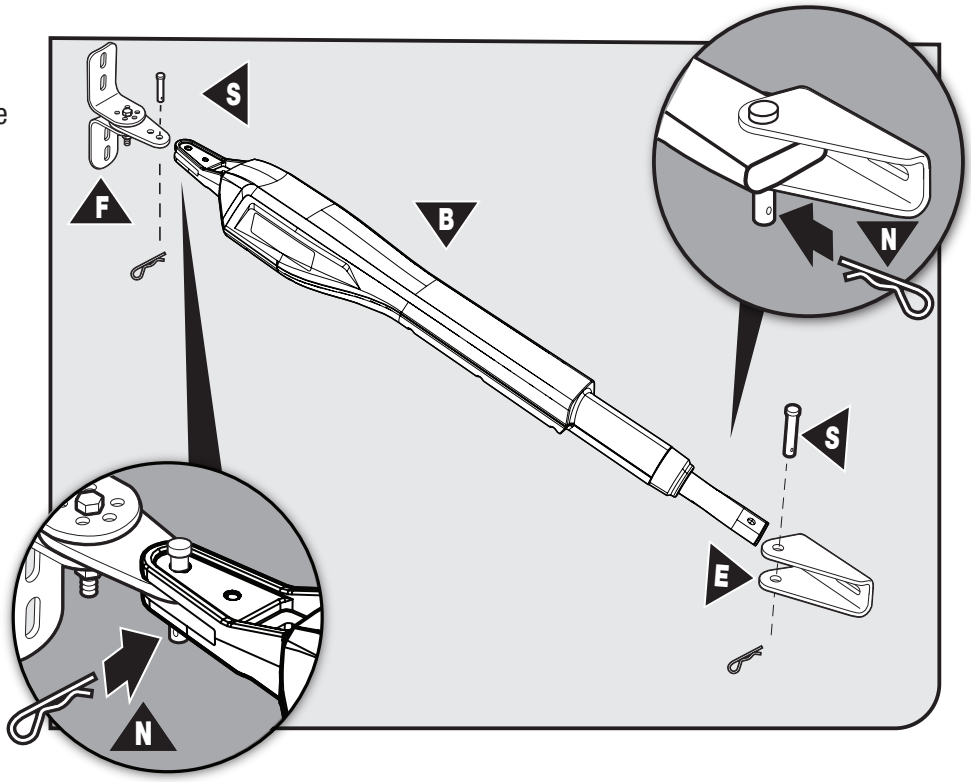

PULL-TO-OPEN OPERATOR MOUNTING

THE OPERATOR MUST BE INSTALLED WHILE FULLY RETRACTED, WITH THE GATE IN THE OPEN POSITION.

Step 3

- With the gate in the OPEN position, use clamps to secure the operator to the gate post and center cross member of the gate.
- Ensure that the operator is level.
- With the operator arm temporarily secured to the gate, check to ensure there is at least 2 inches of clearance between the operator arm and gate. (See illustration in Step 4 below).

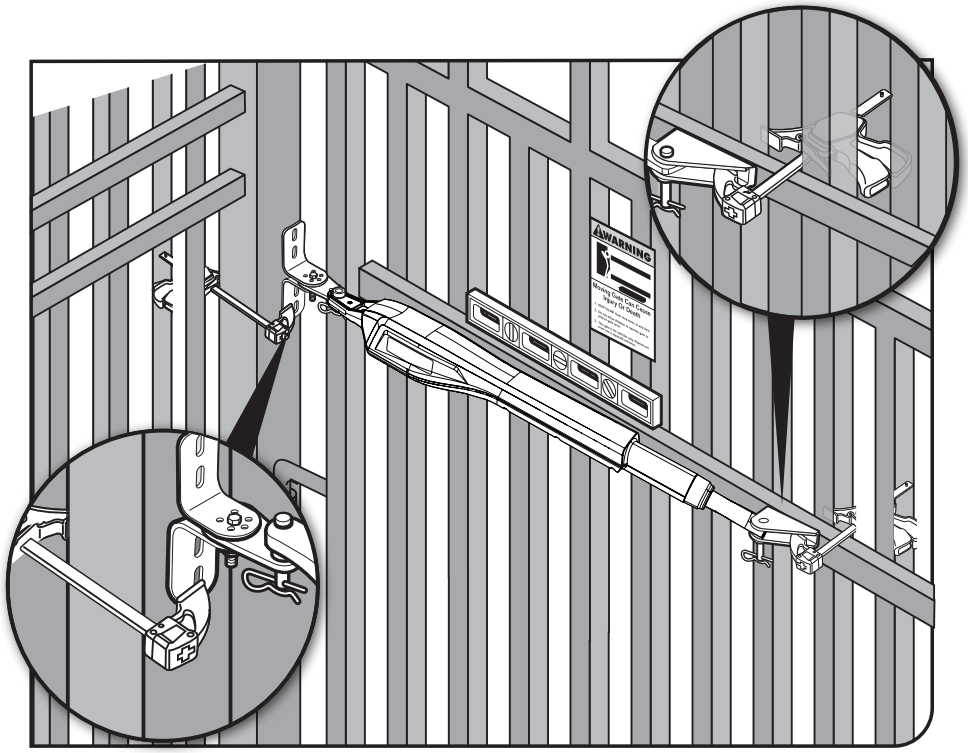

Step 4

- Disconnect the operator arm from the gate bracket.
- While supporting the operator, swing the gate and operator to the closed position.
- Check for recommended clearances and binding as shown. Ensure the rear mount of the operator does not press up against the post pivot bracket assembly in the closed position as indicated in the diagram to the right. Note the circled portion of the diagram.
- Ensure that the necessary arm / stroke does not exceed 20 inches.
- Make adjustments to the mounting brackets to achieve the recommended clearances. Improper clearance will cause undue stress on the operator and may cause physical damage and/or strain the motor.

TIP: Turning the pivot bracket over gives more hole alignment options for the gate post pivot bracket assembly.

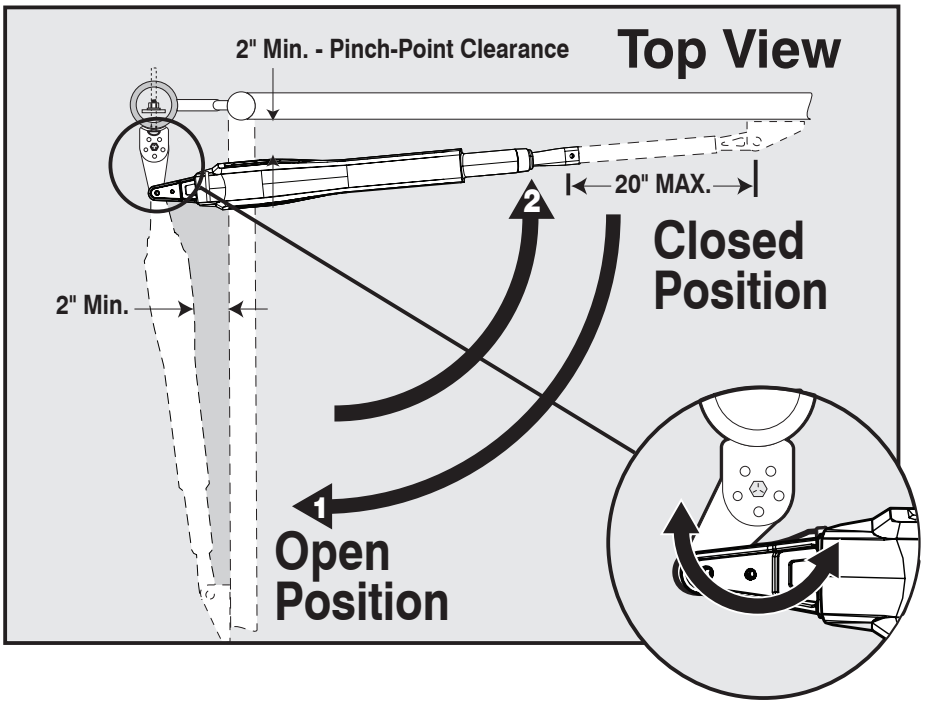

WARNING: ENSURE THE REAR MOUNT DOES NOT MAKE CONTACT WITH THE POST-BRACKET ASSEMBLY DURING ANY POINT OF THE GATE TRAVEL.

PULL-TO-OPEN OPERATOR MOUNTING

Step 5

- Open the gate and reattach the operator to the gate bracket.
- Ensure that the operator arm is level and the brackets are securely clamped.
- Secure the post pivot bracket in place by installing the hardware shown. Tighten both bolts (O and Q).

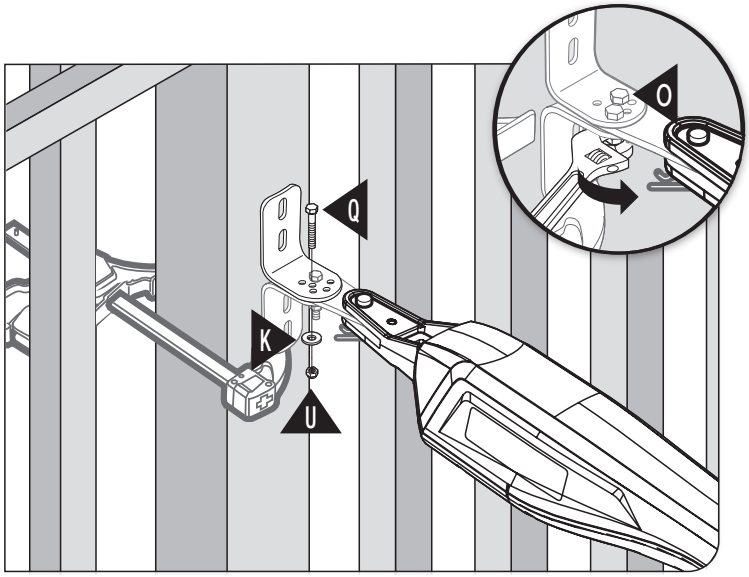

Step 6

- Using a permanent marker, mark the center of the mounting locations for the gate post bracket subassembly.
- Remove the operator arm from the gate post and gate brackets.
- Mark the center of the mounting locations for the gate bracket.

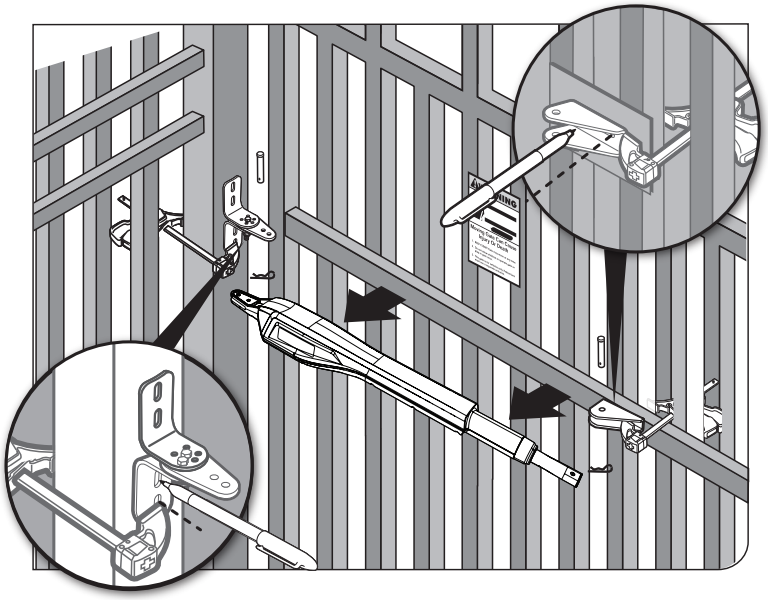

Step 7

- Remove the gate post and gate brackets.
- Use a hammer and center punch to mark the center of the mounting locations.

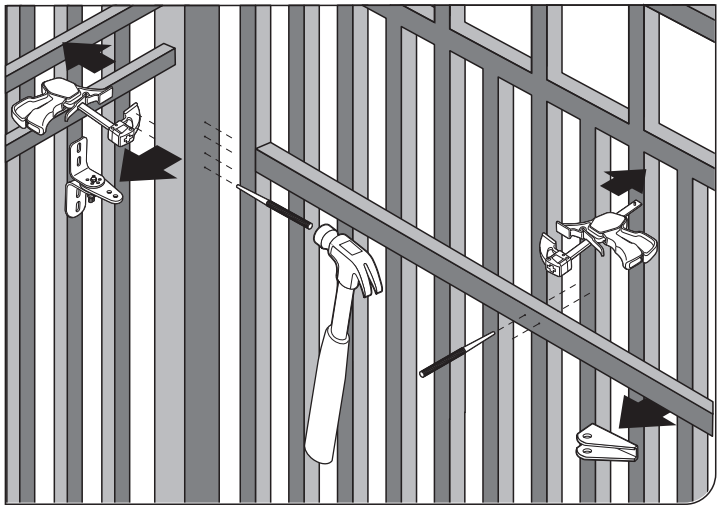

PULL-TO-OPEN OPERATOR MOUNTING

Step 8

- Using a drill and 7/16” drill bit, drill the necessary holes to mount the gate post and gate brackets.

  Note: Some installations may require additional reinforcement be installed on the gate.
  See page 17.

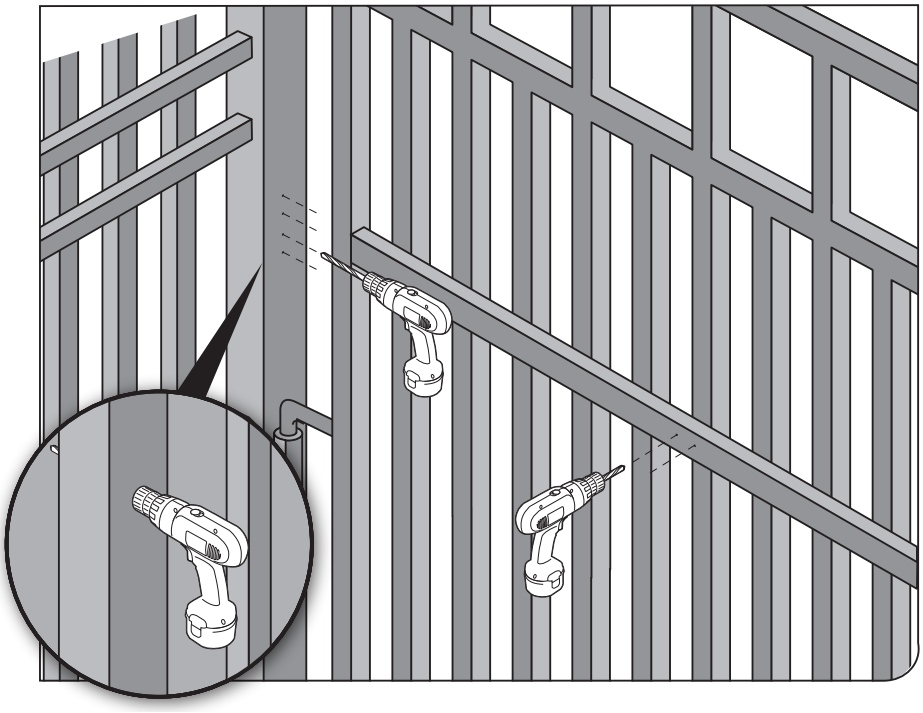

Step 9

- Secure the gate post bracket subassembly with the supplied hardware as shown.

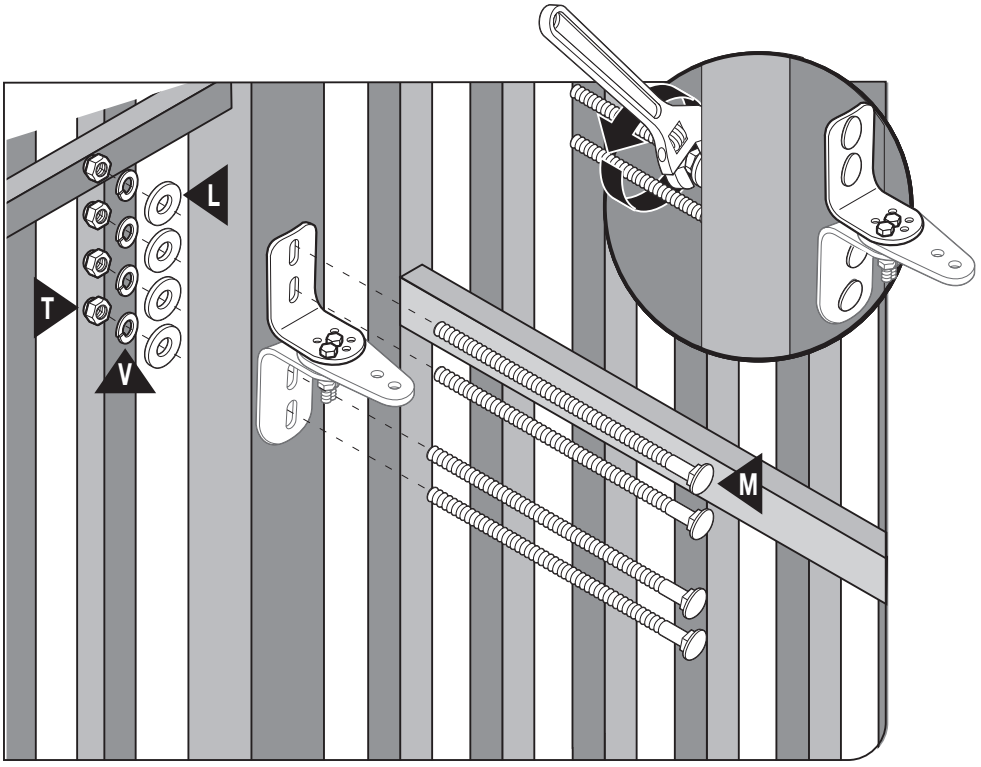

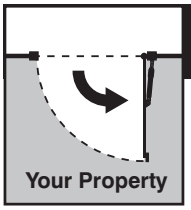

PULL-TO-OPEN OPERATOR MOUNTING

Step 10

- Secure the gate bracket with the supplied hardware as shown.

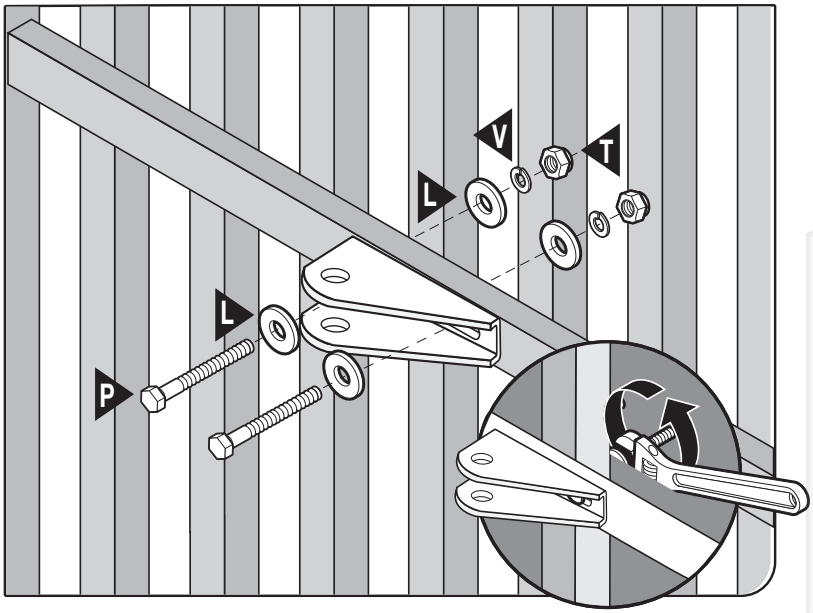

Step 11

- Once the gate post and gate brackets are installed, reattached the operator arm.
- Ensure the operator arm is level, adjusting the post bracket location if necessary.
- Once level, ensure all hardware is tight.
- Remove excess bolt length with a hacksaw.

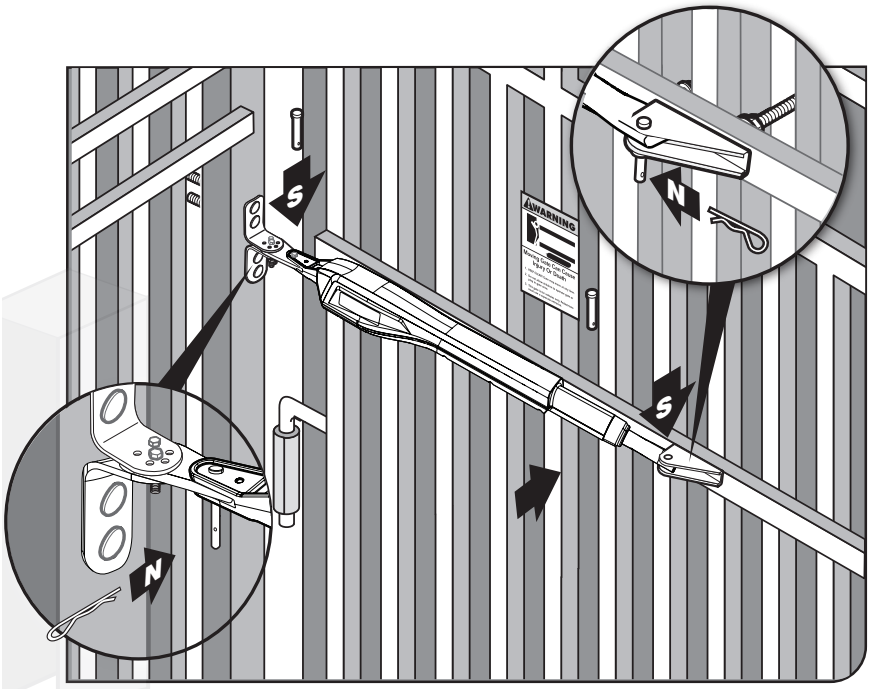

Installing the Secondary Operator (MM572W only):

Note: The Primary arm must be installed on the side near the control box.

Install the secondary operator on the remaining leaf by repeating the same process illustrated in steps 1-11 above.

Note: You will need to run the secondary operator power cable and any hard wired accessory wires under the driveway to the control box (use of conduit is recommended).

Installing the Control Box:

Locating the control box on the gate leaf closest to the power source or desired solar panel location is recommended. The primary operator arm must be located on the gate leaf next to the control box.

See front page of this manual for a complete installation example. After you have mounted the second operator, proceed to Installation of the Closed Position Stop Plate on the following pages.

INSTALLING THE CLOSED POSITION STOP PLATE / PULL-TO-OPEN

Step 1

- Remove the operator from the gate post and gate brackets.
- With the gate fully open, install the closed position stop plate (hardware not included).
- Do not fully tighten hardware until after the next step.

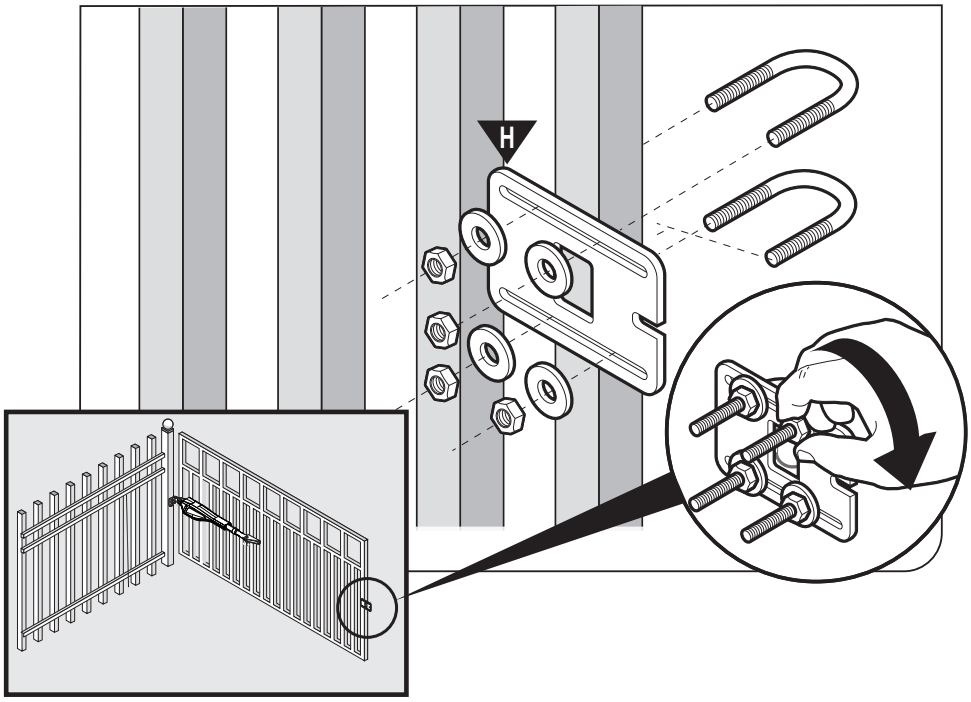

Step 2

- Swing the gate to the closed position, and adjust the closed position stop plate against the fence post.
- Tighten the mounting hardware.
- Return the gate to the open position and reinstall the operator arm.
- To complete the pull-to-open installation, proceed to page 16.

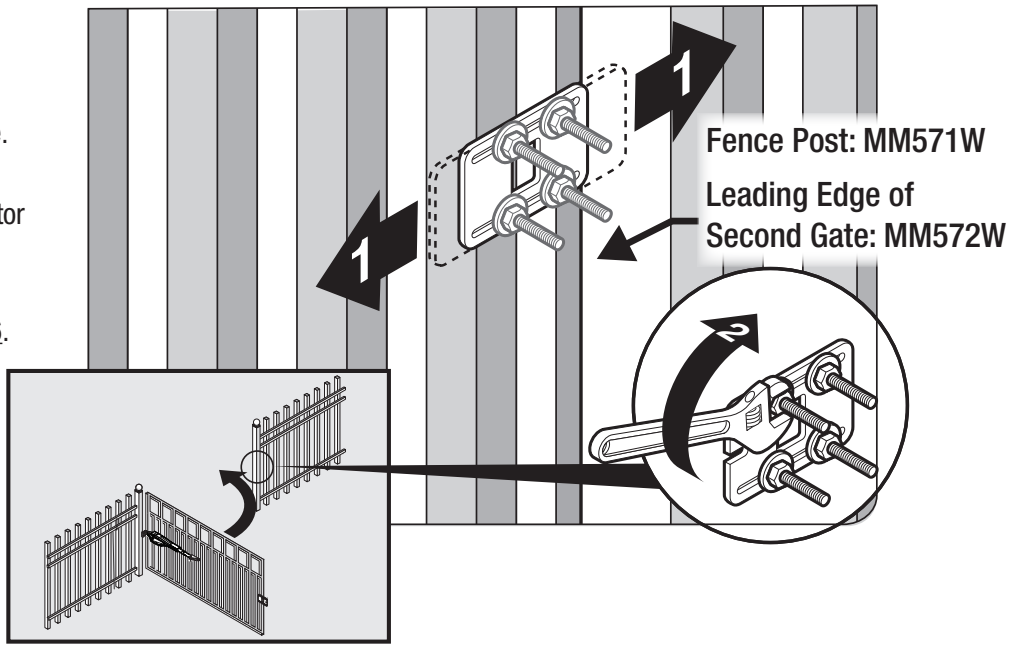

Note: For MM572W installations, the closed position stop plate should be installed on the leading edge of the PRIMARY gate leaf, and adjusted to close against the leading edge of the SECONDARY gate leaf.

INSTALL THE GROUND STOP PLATE

An optional low profile ground stop, when used with the closed position stop plate, provides a secure point for the SECOND gate to close against.

To further enhance the stability and security of your gate, install a Mighty Mule Automatic Gate Lock [FM143]. If you will be using the Mighty Mule Gate Lock with your gate opener system, the closed position ground stop is required.

For *Pull-to-Open* systems, install the Ground Stop Plates on the *inside* of the gates.
For *Push-to-Open* systems, install the Ground Stop Plates on the *outside* of the gates.

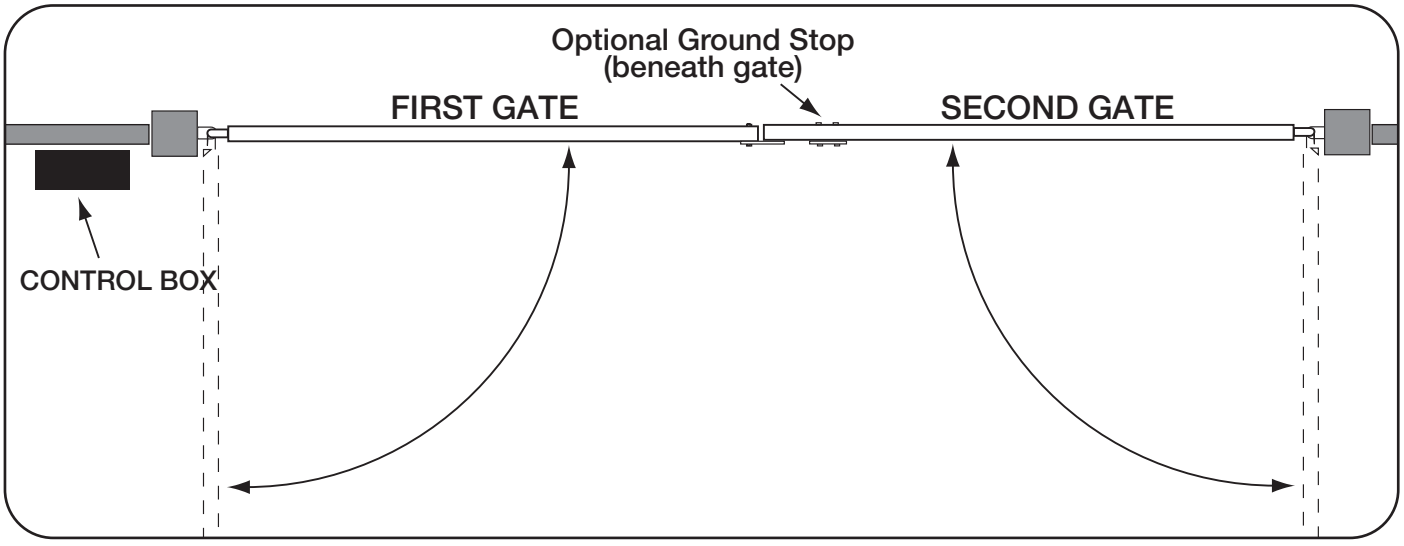

Step 1

Detach the gate opener arms from the gates and move the gates to the closed position.

Step 2

The low profile ground stop may be made of metal or concrete and should be firmly secured in the ground. The low profile ground stop should be installed beneath the SECOND gate, positioned near the leading edge.

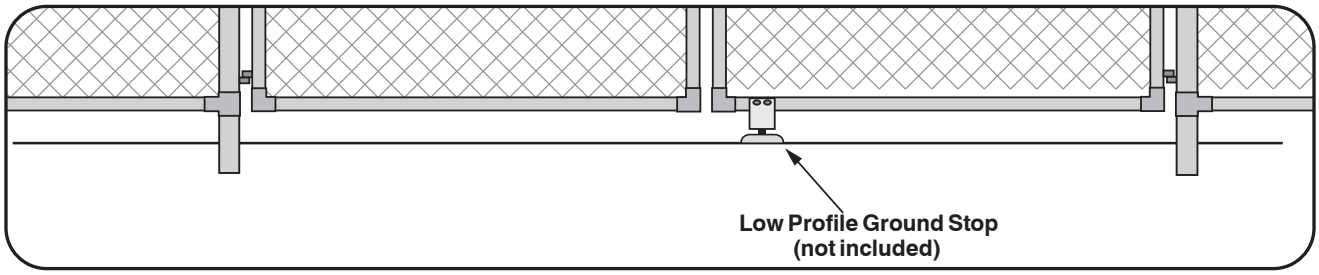

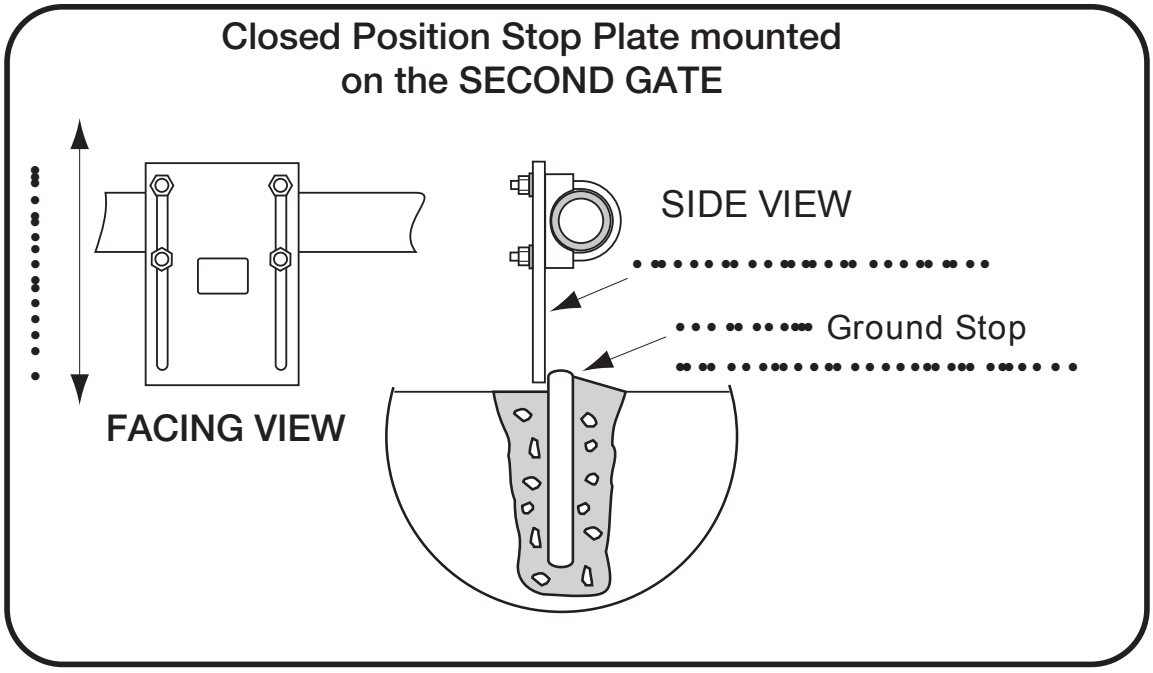

Step 3

Using appropriate hardware for your type of gate, attach the vertical closed position stop plate to the SECOND gate frame at the point where it will come in contact with the low profile ground stop. Do not tighten it completely at this time. You must slide the closed position stop plate toward the low profile ground stop until they touch. Once you have moved the stop plate to the correct position, tighten its hardware completely.

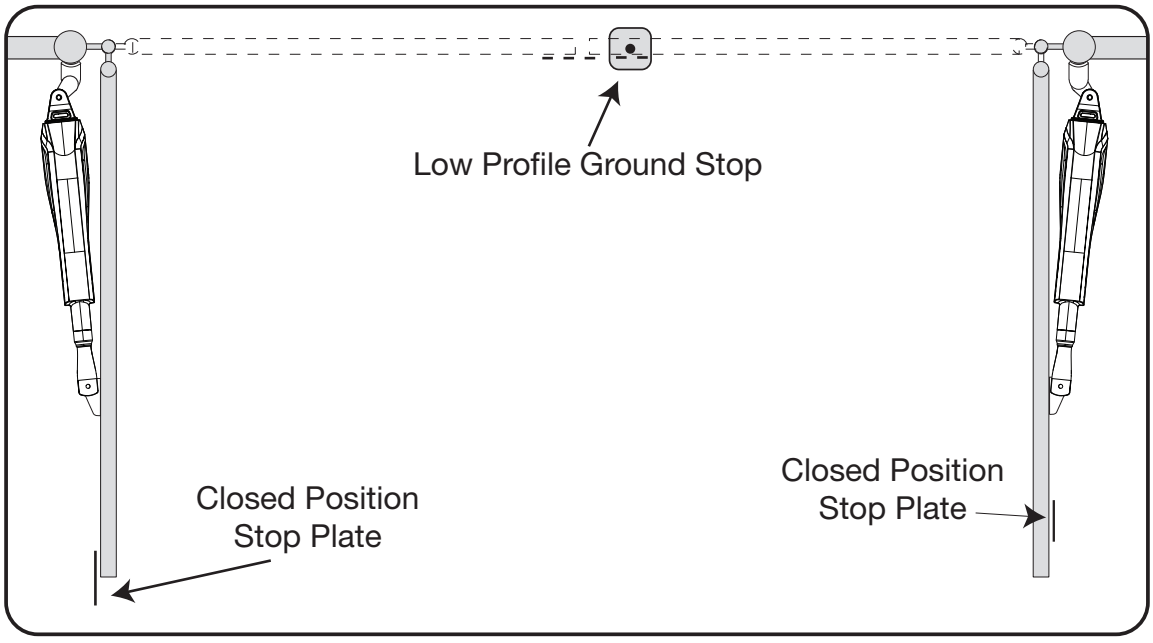

Step 4

Return the gates to their open positions and reattach the gate openers to the gates.

PUSH-TO-OPEN OPERATOR MOUNTING

Step 1

- Assemble the gate post bracket subassembly as shown with the Push-to-Open pivot bracket (FM148). Must be purchased separately.

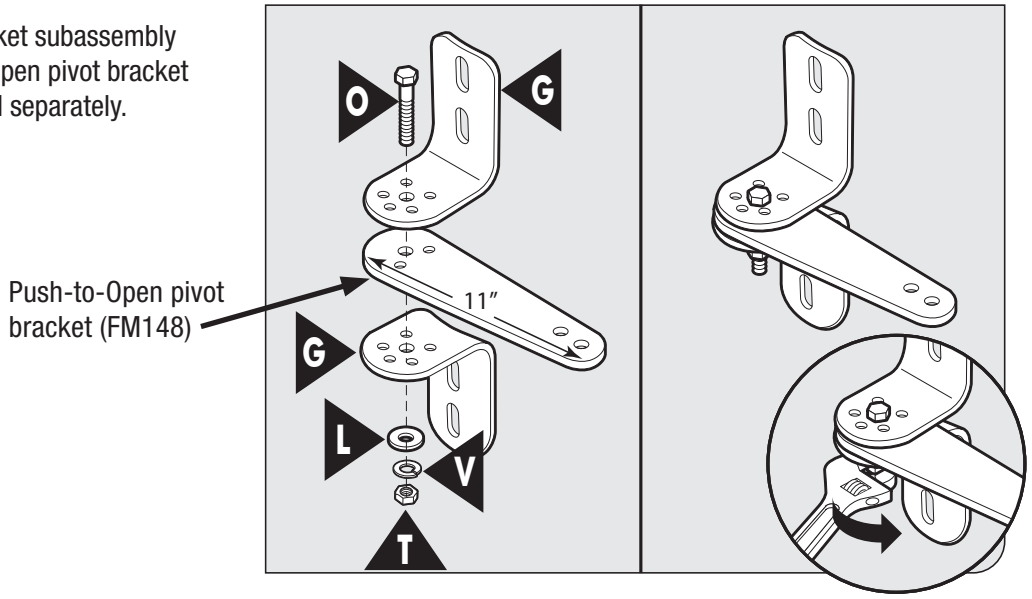

Step 2

- Attach the gate post bracket subassembly and gate bracket to the operator as shown.
- The operator must be retracted with the gate in the closed position. Do not spin out the inner cylinder.

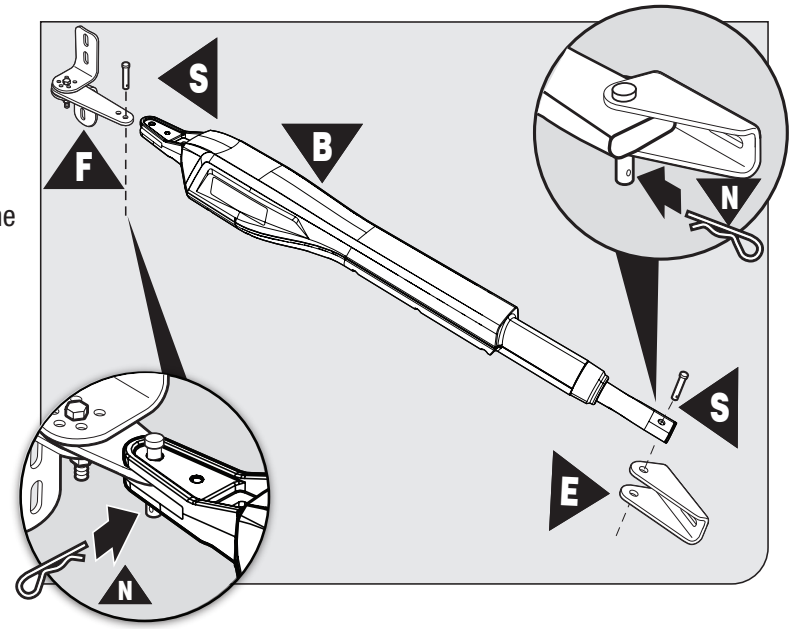

PUSH-TO-OPEN OPERATOR MOUNTING

WARNING: THE OPERATOR MUST BE INSTALLED WHILE FULLY RETRACTED, WITH THE GATE IN THE CLOSED POSITION.

Step 3

- With the gate in the CLOSED position, use clamps to secure the operator to the gate post and center cross member of the gate.
- Ensure that the operator is level.
- With the operator arm temporarily secured to the gate, check to ensure there is at least 2 inches of clearance between the operator arm and gate. (See illustration in Step 4 below).

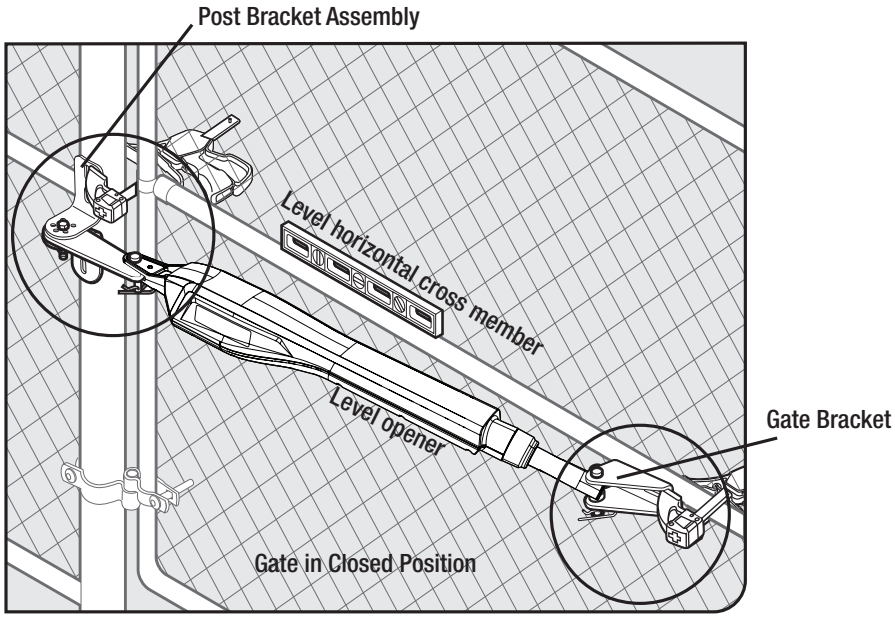

Step 4

- Disconnect the operator arm from the gate bracket.
- While supporting the operator, swing the gate and operator to the OPEN position.
- Check for recommended clearances and binding as shown.
- Ensure that the necessary arm stroke does not exceed 20 inches.
- Make adjustments to the mounting brackets to achieve the recommended clearances.

  TIP: Turning the pivot bracket over gives more hole alignment options for the gate post pivot bracket assembly.

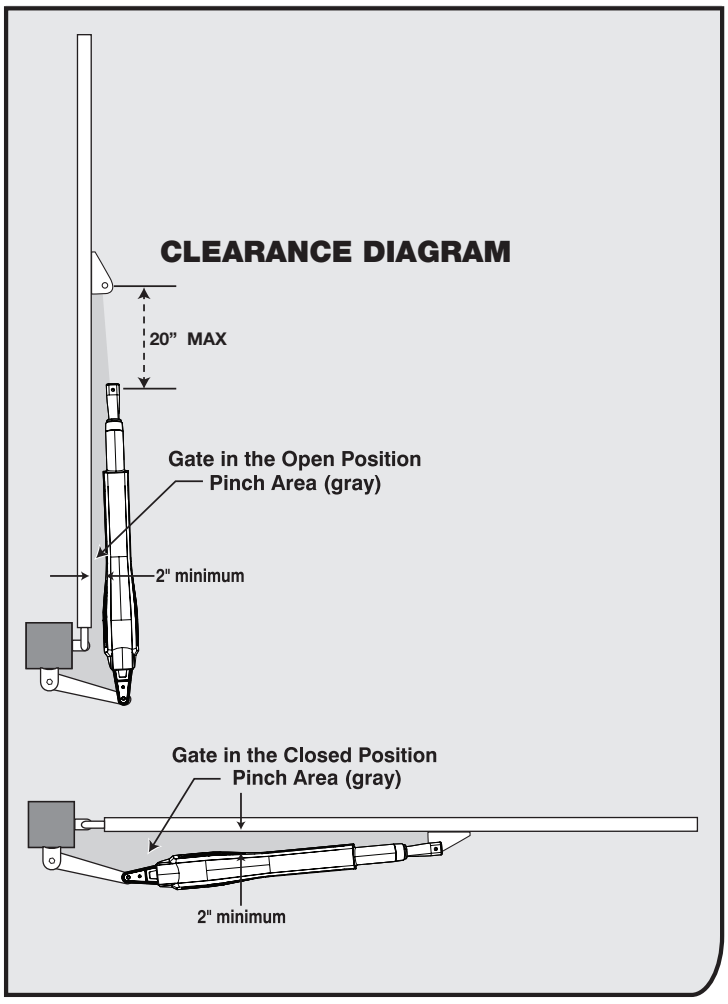

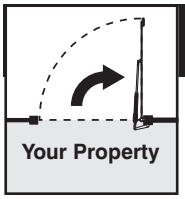

PUSH-TO-OPEN OPERATOR MOUNTING

Step 5

- Close the gate and reattach the operator to the gate bracket.
- Ensure that the operator arm is level and the brackets are securely clamped.
- Secure the post pivot bracket in place by installing the hardware shown. Tighten both bolts ‘O’ and ‘Q’.

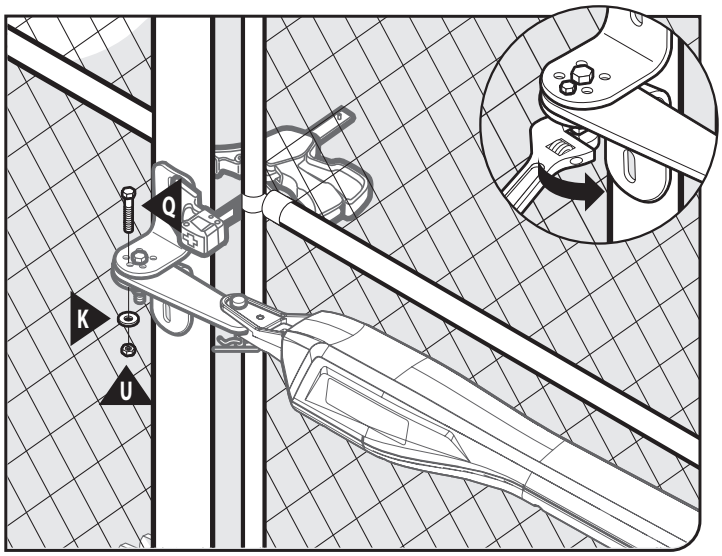

Step 6

- Using a permanent marker, mark the center of the mounting locations for the gate post bracket subassembly.
- Remove the operator arm from the gate post and gate brackets.
- Mark the center of the mounting locations for the gate bracket.

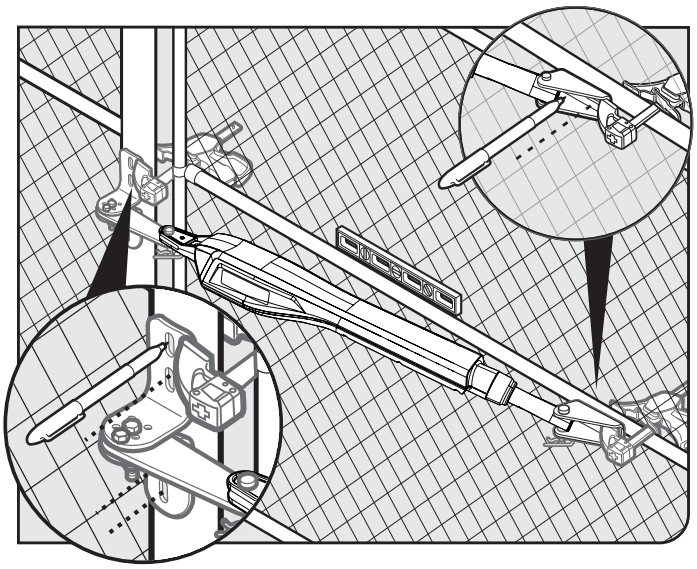

Step 7

- Remove the gate post and gate brackets.
- Use a hammer and center punch to mark the center of the mounting locations.

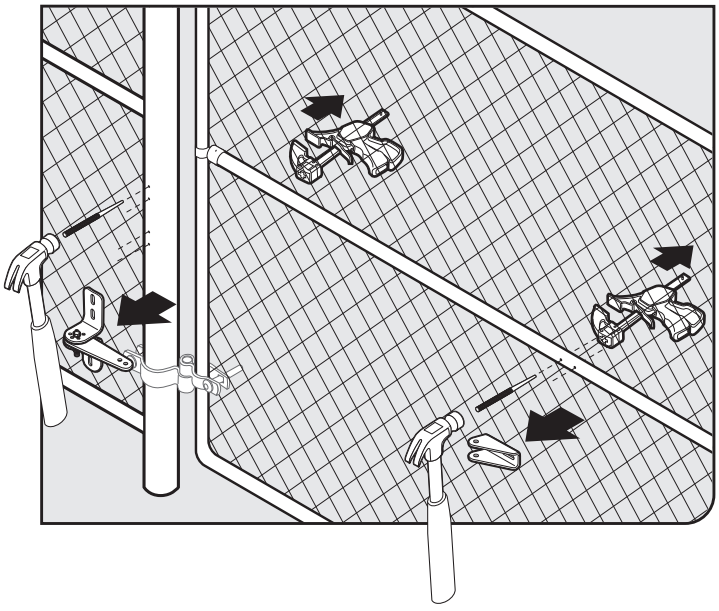

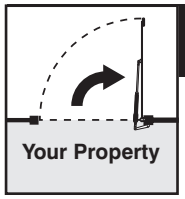

PUSH-TO-OPEN OPERATOR MOUNTING

Step 8

- Using a drill and 7/16” drill bit, drill the necessary holes to mount the gate post and gate brackets.

  Note: Some installations may require additional reinforcement be installed on the gate. See page 17.

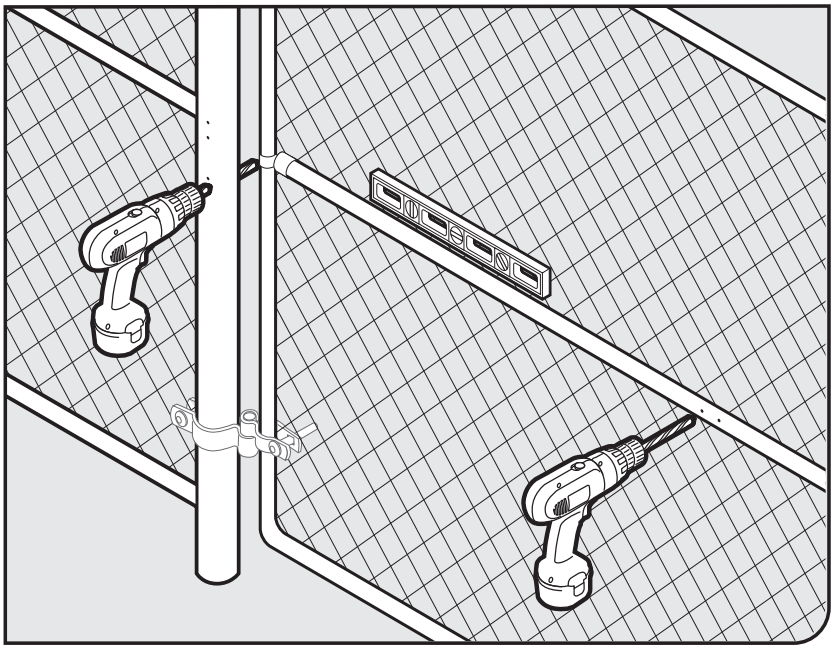

Step 9

- Secure the gate post bracket subassembly with the supplied hardware as shown.

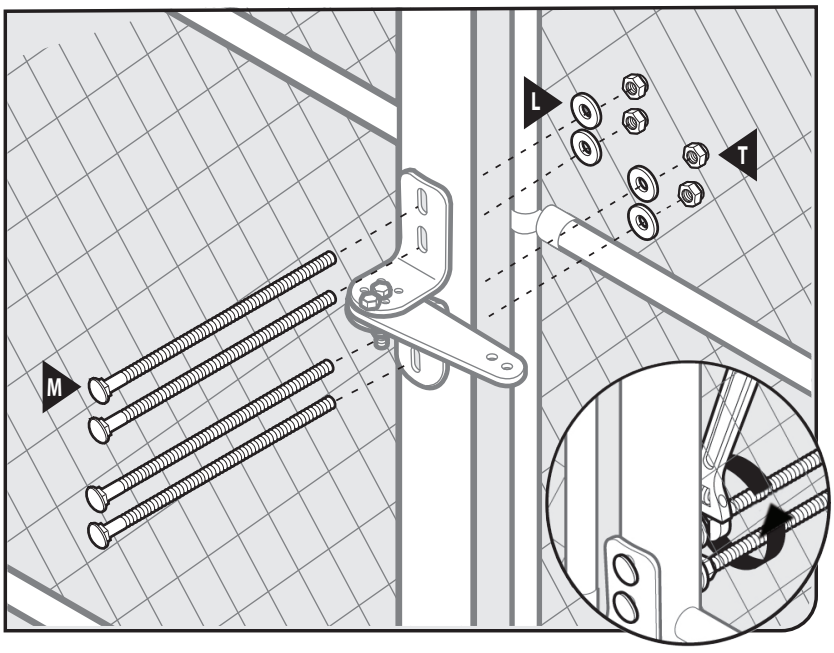

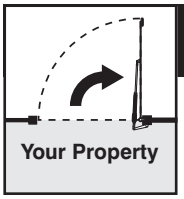

PUSH-TO-OPEN OPERATOR MOUNTING

Step 10

- Secure the gate bracket with the supplied hardware as shown.

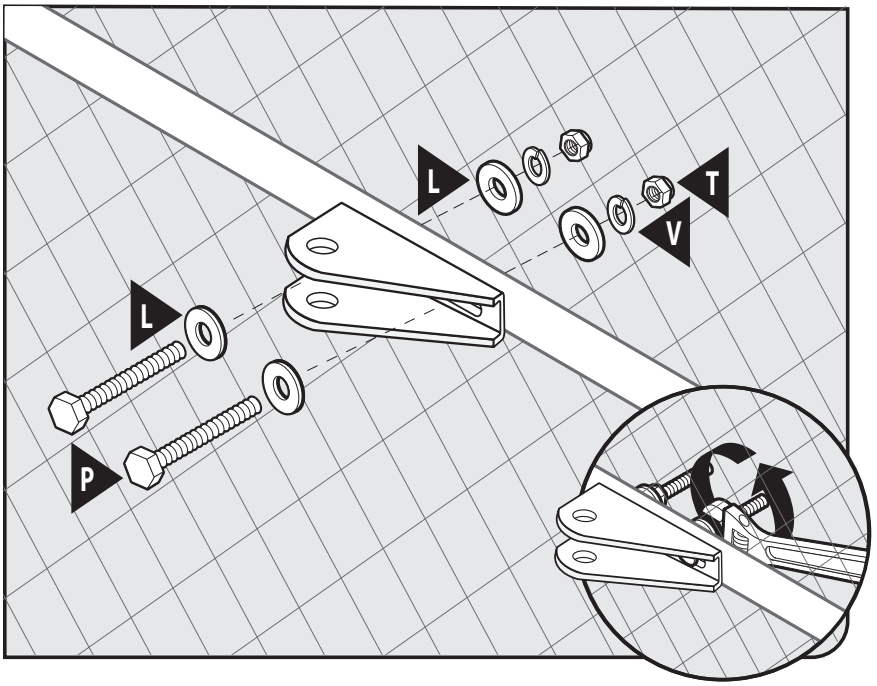

Step 11

- Once the gate post and gate brackets are installed, reattach the operator arm.
- Ensure the operator arm is level, adjusting the post bracket location if necessary.
- Once level, ensure all hardware is tight.
- Remove excess bolt length with a hacksaw.

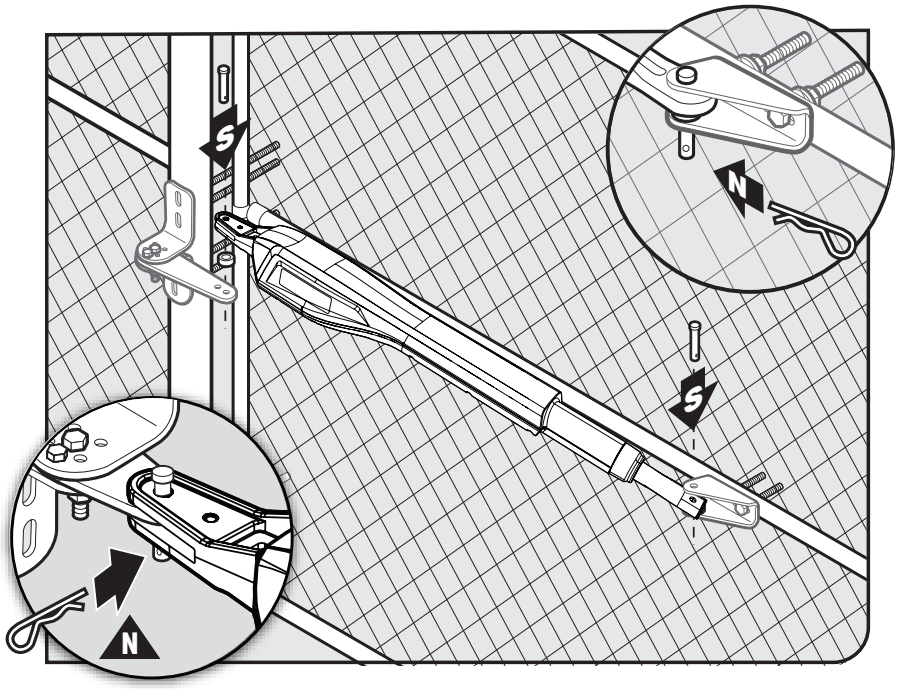

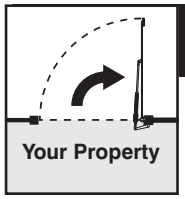

INSTALLING THE CLOSED POSITION STOP PLATE / PUSH-TO-OPEN

Step 1

- Remove the operator from the gate post and gate brackets.
- Swing the gate to the open position.
- With the gate fully open, install the closed position stop plate on the gate opposite the operator (hardware not included).
- Do not fully tighten hardware until after the next step.

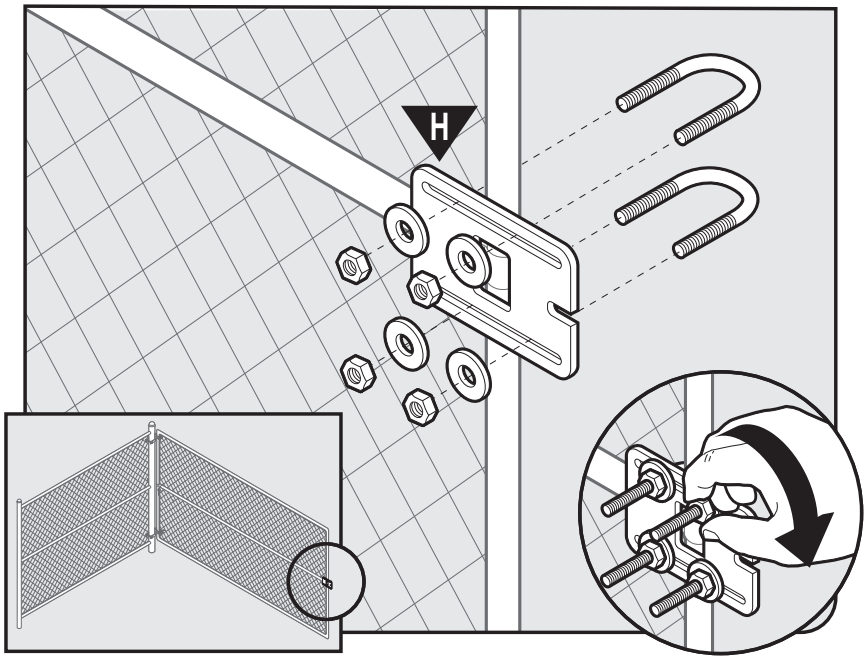

Step 2

- Swing the gate to the closed position, and adjust the closed position stop plate against the fence post.
- Tighten the mounting hardware.
- With the gate in the closed position, reinstall the operator arm.

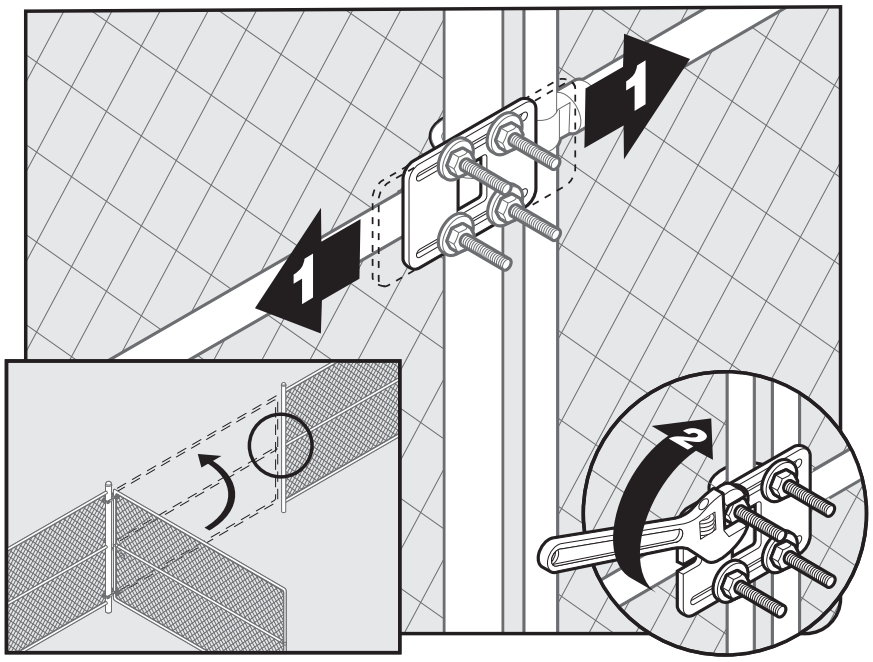

Note: For MM572W installations, the closed position stop plate should be installed on the leading edge of the PRIMARY gate leaf, and adjusted to close against the leading edge of the SECONDARY gate leaf.

CONTROL BOX INSTALLATION

Step 1

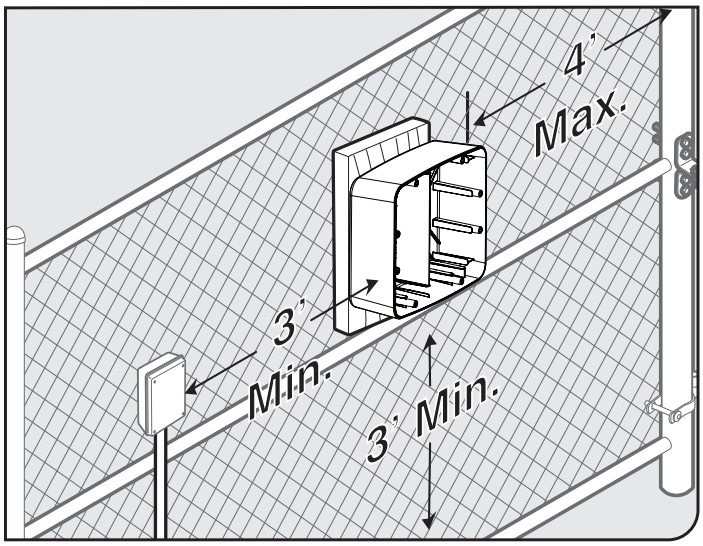

- Identify a suitable mounting location for your control box at least 3 ft. from the ground and no more than 4 ft. from the primary operator.

Note: Always try to mount control box as high as possible to improve radio performance. The recommended location is at least 5 ft. from the ground.

Step 2

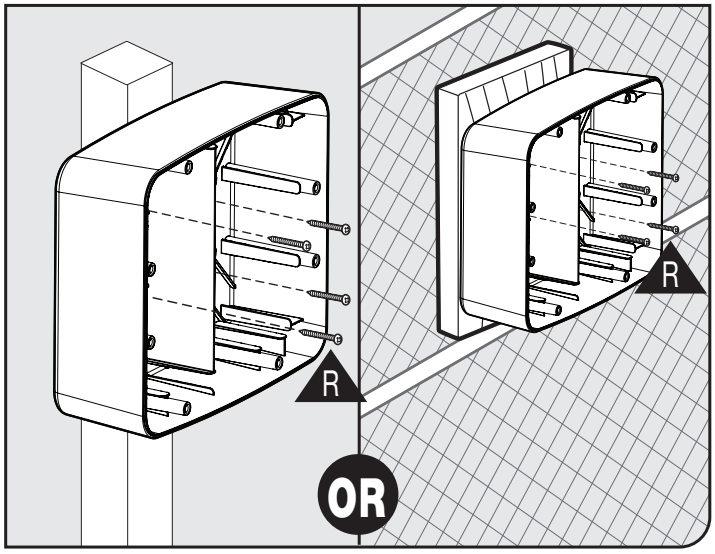

- Once you've identified a suitable mounting location, mount the battery box using the supplied wood screws.
- If the mounting surface is not wood (such as a metal post), you must use a wood panel between the box and the metal post requiring additional hardware (not supplied).

Note: Orient the battery box with the arrow on the inside of the box pointed up.

Step 3

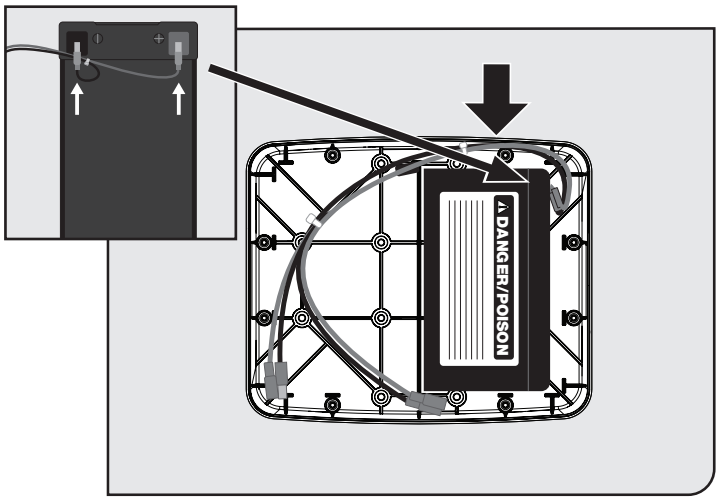

- Connect the battery harness to the battery as shown - red to positive, black to negative terminals.
- Place the battery into the right side of the battery box with the terminals facing to the right and towards the top of the battery box.
- Route the battery harness as shown.

Step 4

- If installing an optional second battery, connect the battery harness as shown in Step 3.
- Place the second battery and route harness as shown.

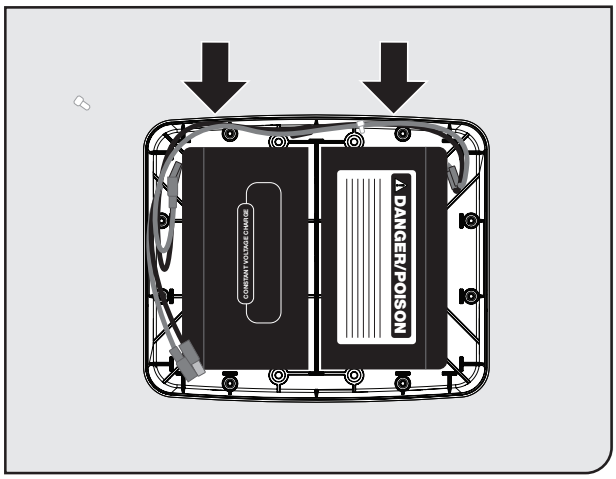

Step 5

- With the 7/32” drill bit, drill through the eight control board panel access holes labeled “B”.
- Locate and knock out the battery cable access hole in the panel.
- Feed the battery cables through the control board casing access hole.
- Attach the control board casing using the eight screws provided.

  NOTE: Figure does not display the control box cover. The cover will be attached on hinges.

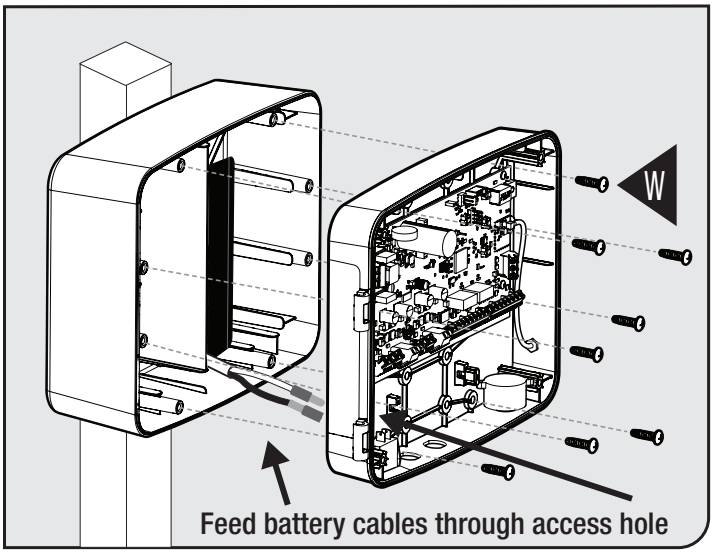

Step 6

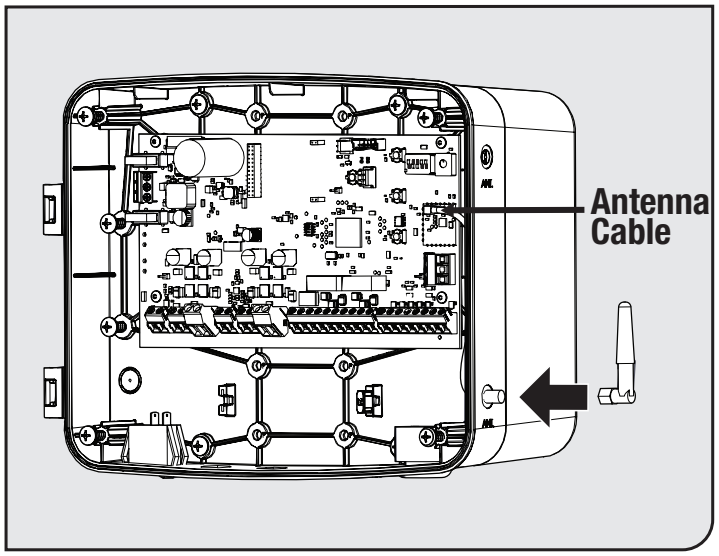

- Install the Antenna by screwing it in place on the SMA connector.
- Orient the antenna straight upward, and securely tighten.

Step 1

- Remove the sealing nut from one of the cable glands on the bottom of the control box.
- Feed the operator wiring harness through the sealing nut.
- For 572W, repeat for the SECONDARY operator.

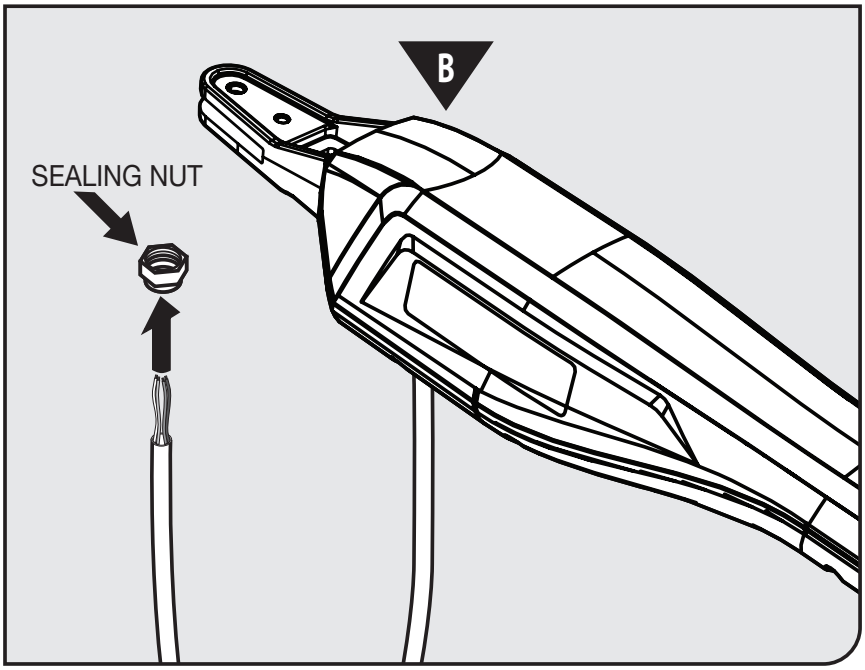

Step 2

- Insert the wire harness through the cable gland into the control box at least 3” to allow connection to the operator wiring terminals.
- Secure the cable in place by tightening the sealing nut.
- For 572W, repeat for the SECONDARY operator.

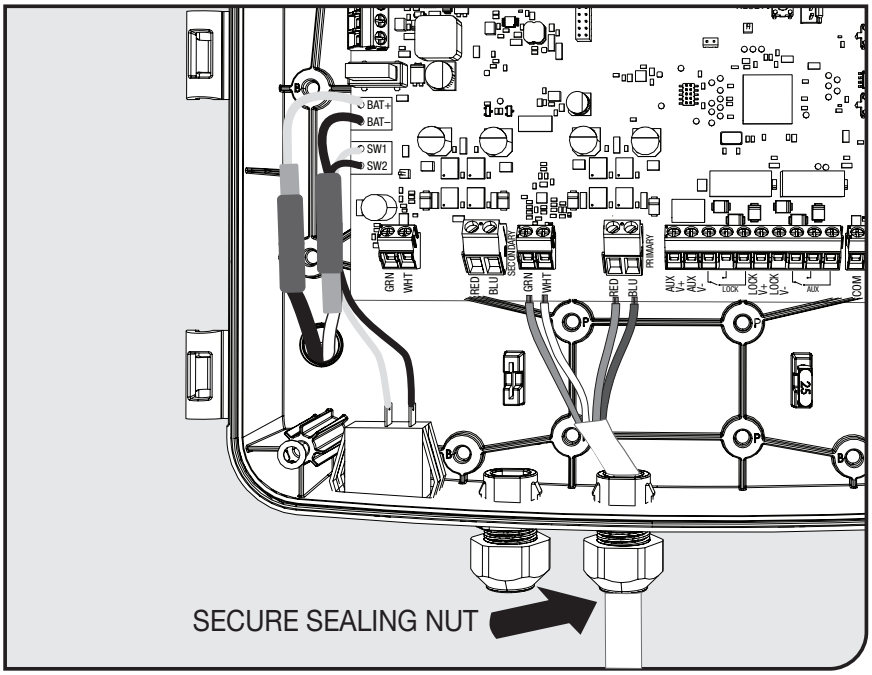

Step 3

- Locate the PRIMARY operator wiring terminals, and insert the wires into the corresponding color terminals.
- For the 572W, locate the SECONDARY operator wiring terminals, and insert the wires from the SECONDARY operator.
- Tighten the screw terminals ensuring the wires are captured correctly as shown

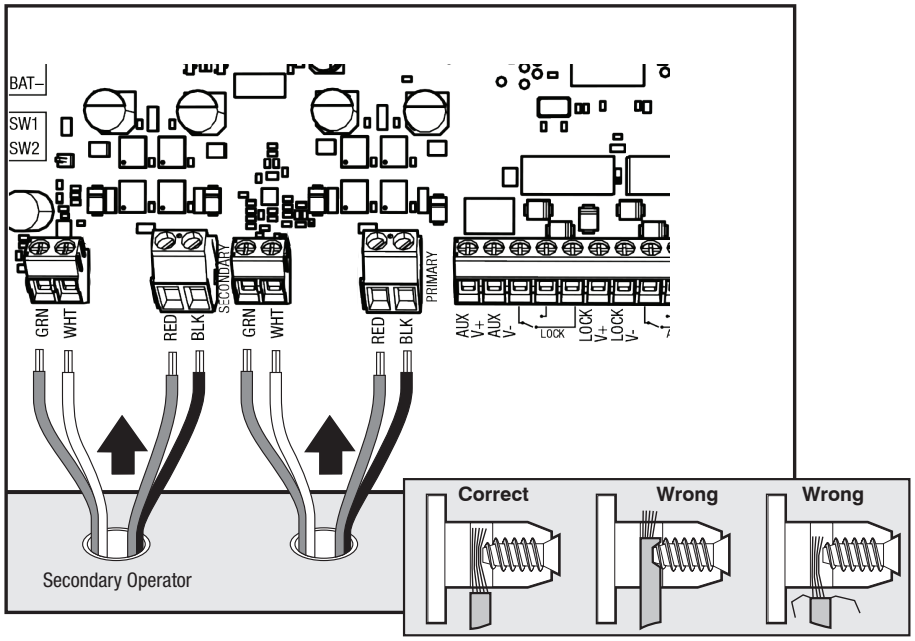

Step 4

- Connect the battery power wires: Red to Red (BAT+) and Black to Black (BAT–).

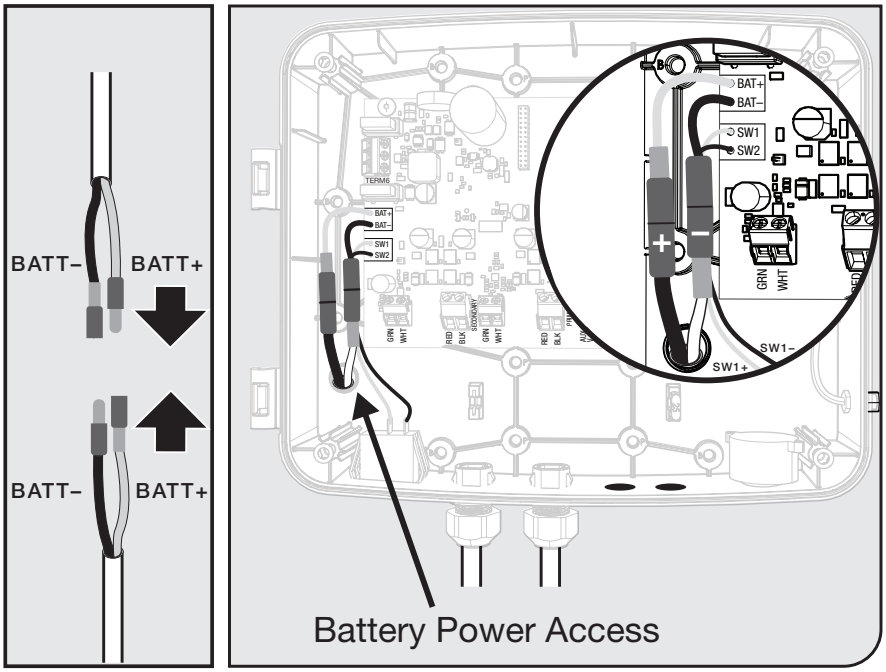

TRANSFORMER OR SOLAR PANEL WIRING INSTALLATION

⚠ WARNING

Before digging contact local authorities to locate underground utilities such as electric and gas service.

Step 1

- Locate power outlet and identify wire path to control box.
- If installing a solar panel (FM123 sold separately), see solar panel instruction manual and skip to Step 3.
- **Note:** If your outlet is outside, you must use a weatherproof cover.

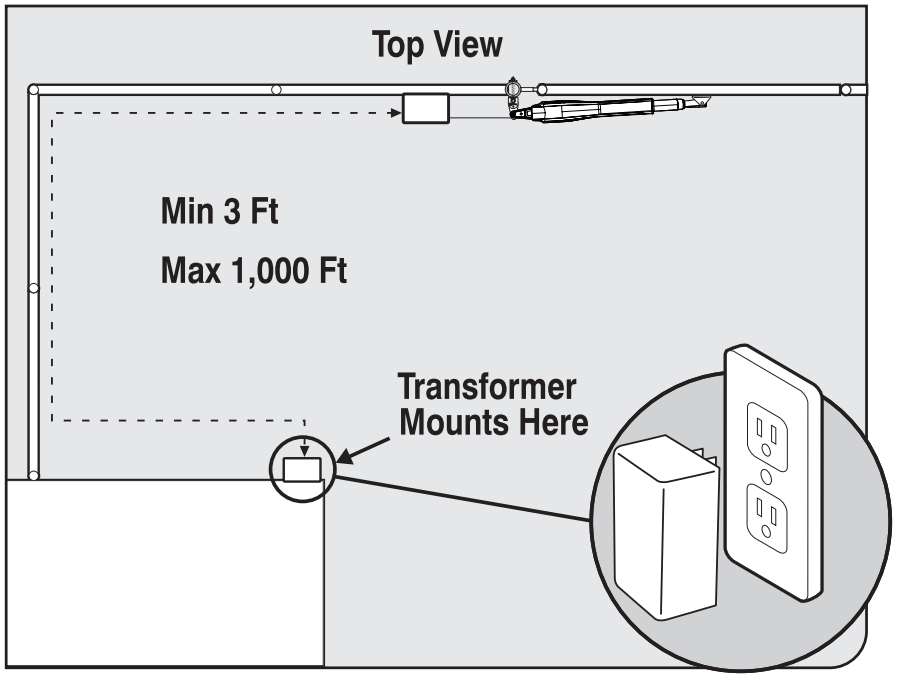

Step 2

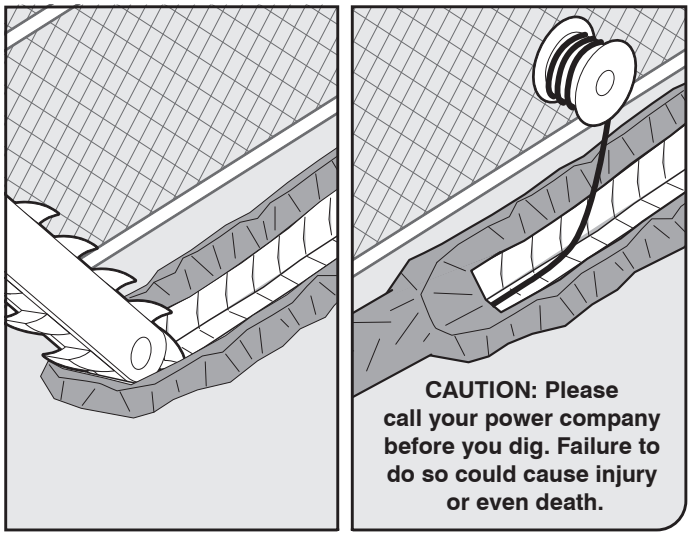

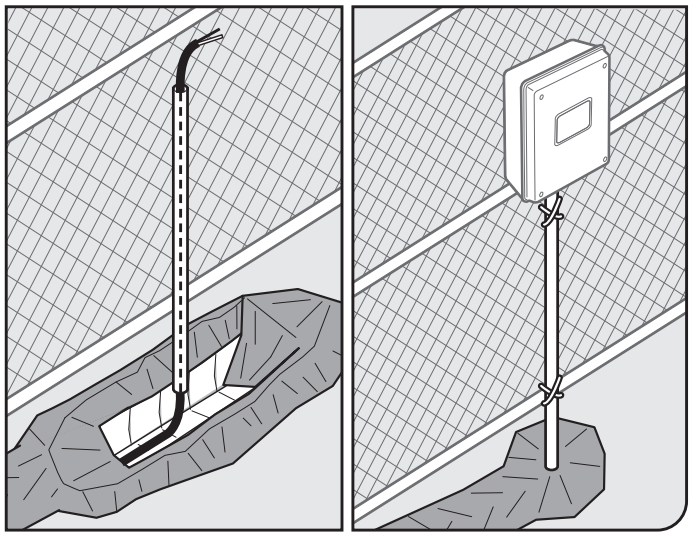

- Along the identified path between outlet and control box, dig a trench to lay the low voltage transformer wire (RB509 sold separately).
- Use PVC conduit from the ground up to the control box.
- Conduit in trench is recommended.

TRANSFORMER OR SOLAR PANEL WIRING INSTALLATION

Step 3

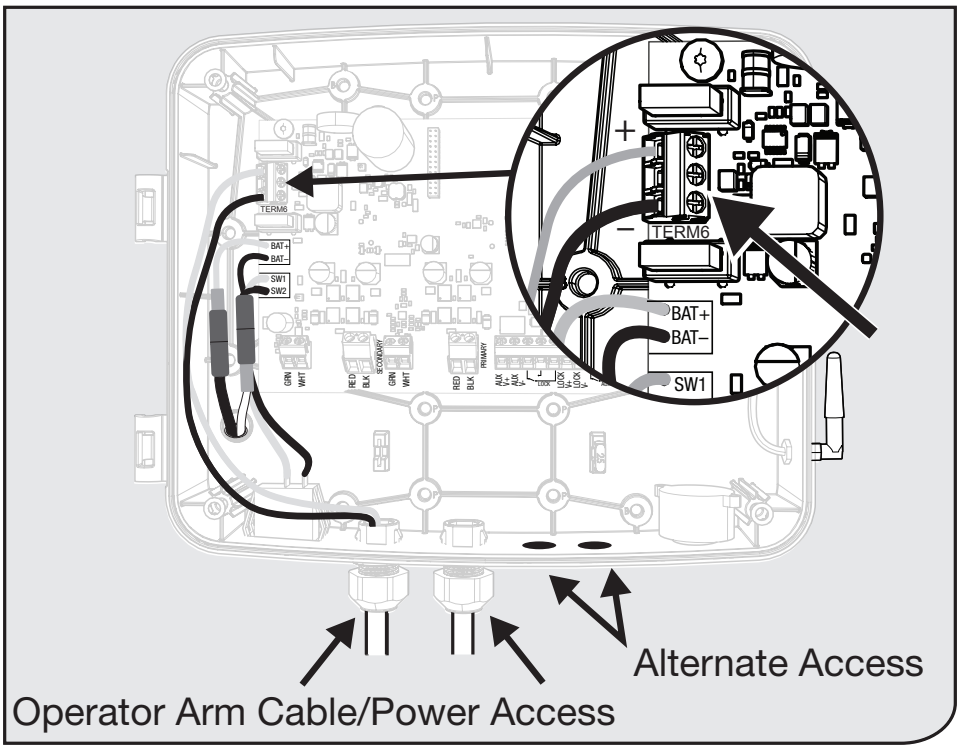

- Feed the transformer or solar panel wires into the control box using one of the access locations on the bottom of the box.
- Connect the RED wire to PWR+ and the BLACK wire to PWR- on TERM 6 as shown.

Step 3B (MM572 Only)

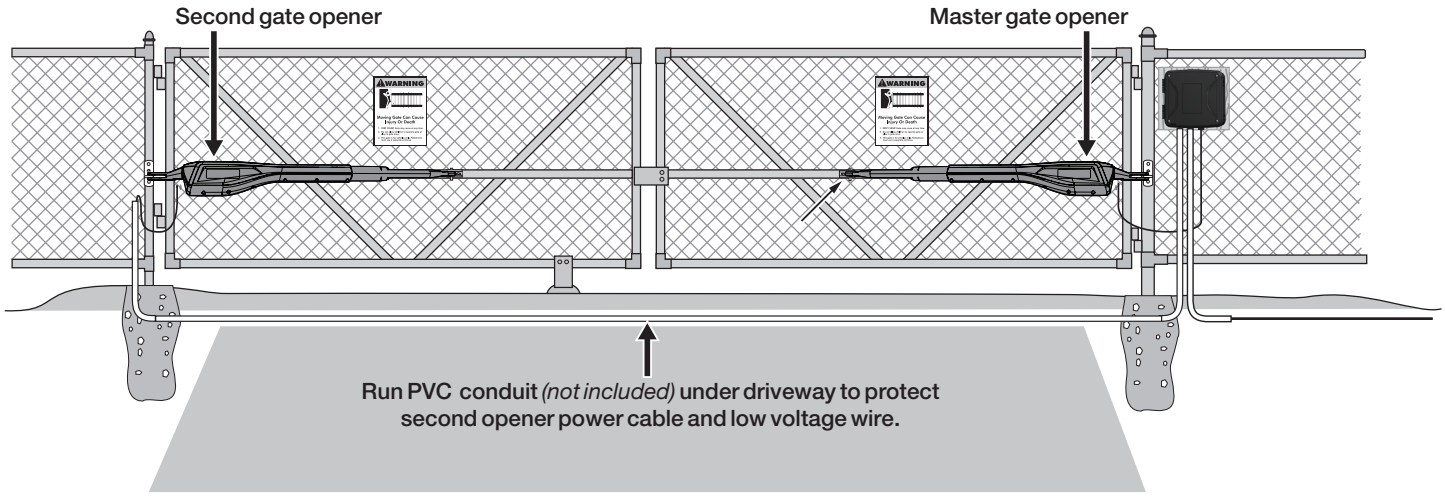

- Cut a 6" deep slot into the driveway to accommodate PVC conduit (not provided) for the power cable coming from the Second opener to the control box. The buried conduit will protect the 44 foot power cable from automobile tires, lawn mower blades, weed eaters, and grazing animals.
- Pull the secondary operator cable through the conduit.
- Repeat steps 1-3 (pages 16-17) for connecting the SECONDARY operator cable to the control board.

Step 4

- From the other end of the low voltage wire, strip 1/2” from both the RED and BLACK wire.
- On the transformer, connect RED wire to the screw terminal marked + and BLACK wire to the screw terminal marked -.
- Plug the transformer into the selected electrical outlet.

Note: Use of a surge protector is strongly recommended.

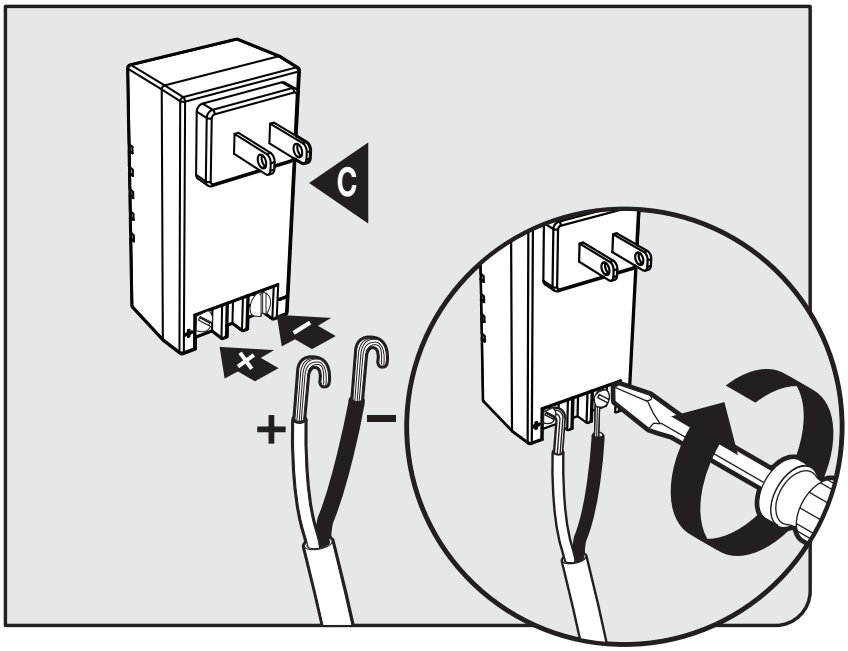

MM572 Installation - For dual arm installation, drill through one of the **Alternate Access** slots to install the Transformer or Solar power wires.

Electrical Installation and Setup

DIP SWITCHES SETTINGS

1. Push/Pull-to-Open

- On ▯ = Push
- Off ▮ = Pull

For changes to this switch to take effect, the unit must be reset or power cycled.

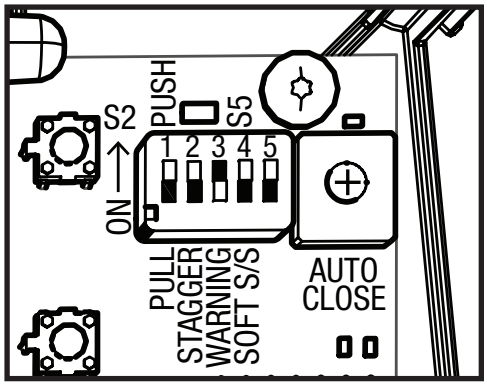

2. Stagger

- For dual gate installations (MM572W),
- OFF - Gates will open simultaneous, but close staggered.
- ON - Gates will stagger while opening and closing for compatibility with gate locks.

3. Warning

- The WARNING DIP switch toggles a movement alarm ON or OFF.

Powering the System

- Locate the ON/OFF switch on the bottom left of the control box.
- Toggle the switch to the ON position.
- The system will take approximately 20 seconds to power up indicated by an audible tone and LED D17 will flash.

How to Learn a Transmitter:

1. On the control board, press and hold the (return/enter) button until LED2 beside the (return/enter) button turns on and the buzzer sounds. Release the (return/enter) button.
2. Press and hold the desired transmitter button. Once learned, LED2 will flash and the buzzer will sound indicating that the transmitter has been learned.

1

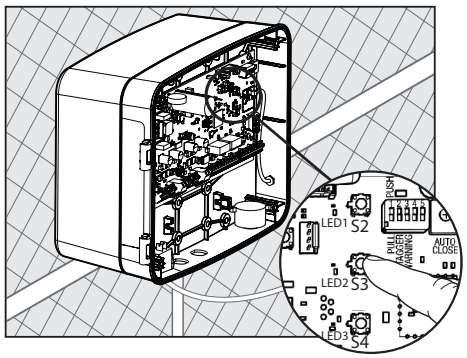

2

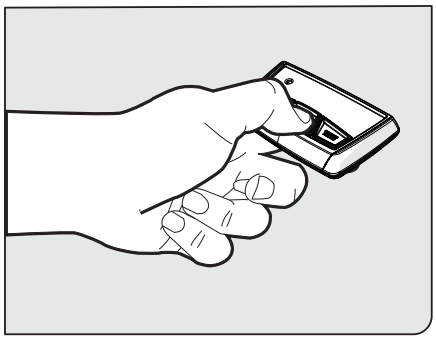

How to Erase a Transmitter or Keypad (MMK200) code:

Repeat steps 1-2 above to erase the learned transmitter or keypad code.

How to Erase ALL Learned Transmitters or Keypad codes:

1. Enter the 'Learn Transmitter' mode following step 1 above.
2. Press and hold the (down arrow) button until LED1, 2 & 3 flash and the buzzer sounds. (Approximately 10 seconds.)

Note: The control board can store a total of 50 transmitter and/or keypad codes. The system is compatible with Mighty Mule DIP switch transmitters and keypads.

1

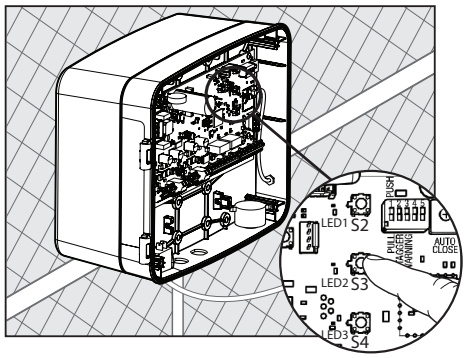

2

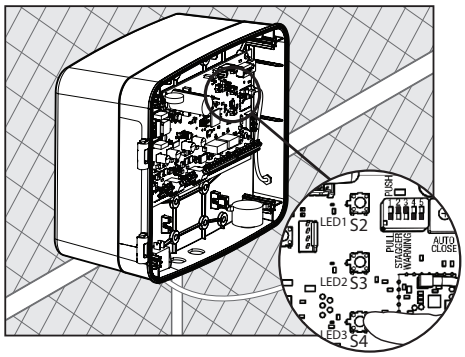

WARNING: Changes, modifications or adjustments not expressly approved by Nortek Security & Control, LLC could void the user's authority to operate this equipment. There Are No User Serviceable Parts.

571 Closed Limit Programming

For Pull-to-Open Applications

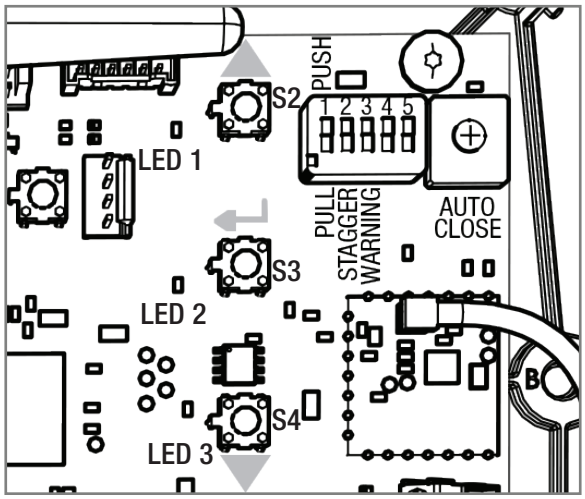

Step 1: Enter the primary arm limit programming mode.

With the power on for your control box, press and hold both the **S2** and the **S3** buttons at the same time until **LED 1** turns on and the buzzer sounds, and then release them.

Step 2: Program the primary arm closed limit.

1. Next, press and hold **S2** and you will hear a long beep and the arm will begin to extend, closing the gate. Continue holding the button down until the gate reaches the desired closed position, and then release.
2. If you overshoot the desired closed position, you can use **S4** to reverse the gate.
3. Adjust as needed until you are totally satisfied with the closed position. Then, press and hold **S3** until the buzzer sounds, and then release.

NOTE: If you hear three short beeps in succession, that means that the programming mode has timed out and you will need to enter the programming mode again. You do not have to start the positioning all over. If the closed position is already correct but you have timed out, press and hold **S2** and **S3** until the buzzer sounds, then release. Then, immediately press and hold **S3** until the buzzer sounds and then release.

572 Closed Limit Programming

For Pull-to-Open Applications

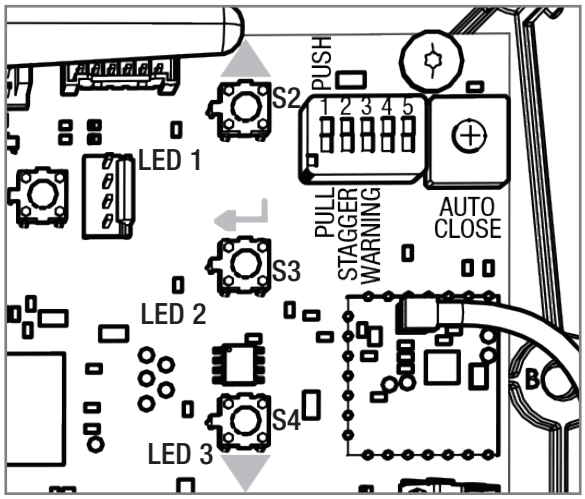

Step 1: Enter the secondary arm limit programming mode.

With the power on for your control box, press and hold both the **S3** and the **S4** buttons at the same time until **LED 3** turns on and the buzzer sounds, and then release them.

Step 2: Program the secondary arm closed limit.

1. Next, press and hold **S2** and you will hear a long beep and the arm will begin to extend, closing the gate. Continue holding the button down until the gate reaches the desired closed position, and then release.
2. If you overshoot the desired closed position, you can use **S4** to reverse the gate.
3. Adjust as needed until you are totally satisfied with the closed position. Then, press and hold **S3** until the buzzer sounds, and then release.

NOTE: If you hear three short beeps in succession, that means that the programming mode has timed out and you will need to enter the programming mode again. **You do not have to start the positioning all over.** If the closed position is already correct but you have timed out, press and hold **S3** and **S4** until the buzzer sounds, then release. Then, immediately press and hold **S3** until the buzzer sounds and then release.

Step 3: Enter the primary arm limit programming mode.

With the power on for your control box, press and hold both the **S2** and the **S3** buttons at the same time until **LED 1** turns on and the buzzer sounds, and then release them.

Step 4: Program the primary arm closed limit.

4. Next, press and hold **S2** and you will hear a long beep and the arm will begin to extend, closing the gate. Continue holding the button down until the gate reaches the desired closed position, and then release.
5. If you overshoot the desired closed position, you can use **S4** to reverse the gate.
6. Adjust as needed until you are totally satisfied with the closed position. Then, press and hold **S3** until the buzzer sounds, and then release.

NOTE: If you hear three short beeps in succession, that means that the programming mode has timed out and you will need to enter the programming mode again. **You do not have to start the positioning all over.** If the closed position is already correct but you have timed out, press and hold **S2** and **S3** until the buzzer sounds, then release. Then, immediately press and hold **S3** until the buzzer sounds and then release.

571 Open Limit Programming

For Push-to-Open Applications

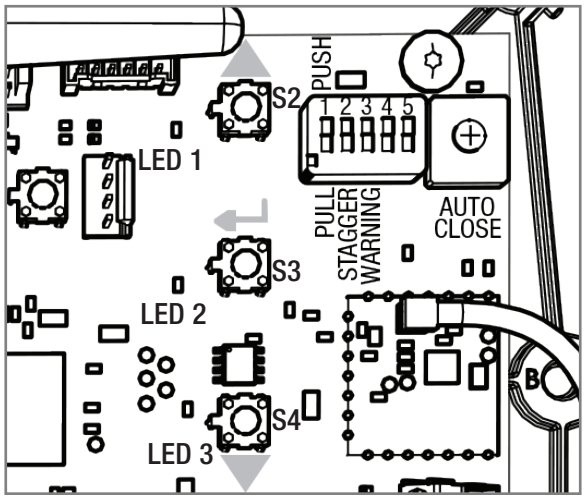

Step 1: Enter the primary arm limit programming mode.

With the power on for your control box, press and hold both the **S2** and the **S3** buttons at the same time until **LED 1** turns on and the buzzer sounds, and then release them.

Step 2: Program the primary arm closed limit.

1. Next, press and hold **S2** and you will hear a long beep and the arm will begin to extend, opening the gate. Continue holding the button down until the gate reaches the desired open position, and then release.
2. If you overshoot the desired open position, you can use **S4** to reverse the gate.
3. Adjust as needed until you are totally satisfied with the open position. Then, press and hold **S3** until the buzzer sounds, and then release.

NOTE: If you hear three short beeps in succession, that means that the programming mode has timed out and you will need to enter the programming mode again. You do not have to start the positioning all over. If the open position is already correct but you have timed out, press and hold **S2** and S3 until the buzzer sounds, then release. Then, immediately press and hold **S3** until the buzzer sounds and then release.

572 Open Limit Programming

For Push-to-Open Applications

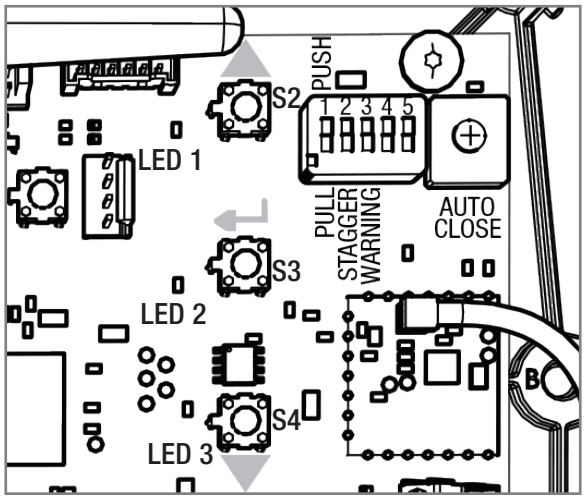

Step 1: Enter the primary arm limit programming mode.

With the power on for your control box, press and hold both the **S2** and the **S3** buttons at the same time until **LED 1** turns on and the buzzer sounds, and then release them.

Step 2: Program the primary arm closed limit.

1. Next, press and hold **S2** and you will hear a long beep and the arm will begin to extend, opening the gate. Continue holding the button down until the gate reaches the desired open position, and then release.
2. If you overshoot the desired open position, you can use **S4** to reverse the gate.
3. Adjust as needed until you are totally satisfied with the open position. Then, press and hold **S3** until the buzzer sounds, and then release.

NOTE: If you hear three short beeps in succession, that means that the programming mode has timed out and you will need to enter the programming mode again. You do not have to start the positioning all over. If the open position is already correct but you have timed out, press and hold **S2** and **S3** until the buzzer sounds, then release. Then, immediately press and hold **S3** until the buzzer sounds and then release.

Step 3: Enter the secondary arm limit programming mode.

With the power on for your control box, press and hold both the **S3** and the **S4** push buttons at the same time until **LED 3** turns on and the buzzer sounds, and then release them.

Step 4: Program the secondary arm open limit.

4. Next, press and hold **S2** and you should hear a long beep and the arm will begin to extend, opening the gate. Keep holding the button down until the gate reaches the desired open position, and then release.
5. If you overshoot the desired open position, you can use **S4** to retract the arm in.
6. Adjust as needed until you are totally satisfied with the open position. Then, press and hold **S3** until you the buzzer sounds, and then release.

NOTE: If you hear three short beeps in succession, that means that the programming mode has timed out and you will need to enter the programming mode again. You do not have to start the positioning all over. If the open position is already correct but you have timed out, press and hold **S3** and **S4** until the buzzer sounds, then release. Then, immediately press and hold **S3** until the buzzer sounds and then release.

DUAL SENSE STALL FORCE SETTING

Do not use the Dual Sense Stall Force adjustment to compensate for a gate that is sticking or binding. Excessive Stall force may cause damage to the gate operator or gate system.

The Stall Force adjustment controls the amount of force the opener will apply against an obstruction before it stops and reverses direction. The controller includes three Stall Force settings, and is preset from the factory to Low. If your operator stops and reverses during a normal cycle, follow the instructions below to change the Stall Force setting.

Adjusting the Stall Force:

1. Press and hold the ▲ and ▼ buttons until the buzzer sounds (approximately 2 seconds). Release.
2. Use the ▲ and ▼ to adjust the Stall Force setting. LED1, 2, & 3 are used to indicate the setting. LED3 ON indicates LOW, LED3 & 2 ON indicates MEDIUM, and LED1, 2 & 3 ON indicates HIGH.
3. Press the ↵ button until the buzzer sounds, then release to set the Stall Force setting.

AUTO CLOSE SETTING

Step 1

- The auto close timer is set to OFF from the factory.
- To set an auto close timer, use a small flat head screw driver to turn the auto close potentiometer clockwise.
- The timer can be set from approximately 3 seconds to a maximum of 120 seconds.

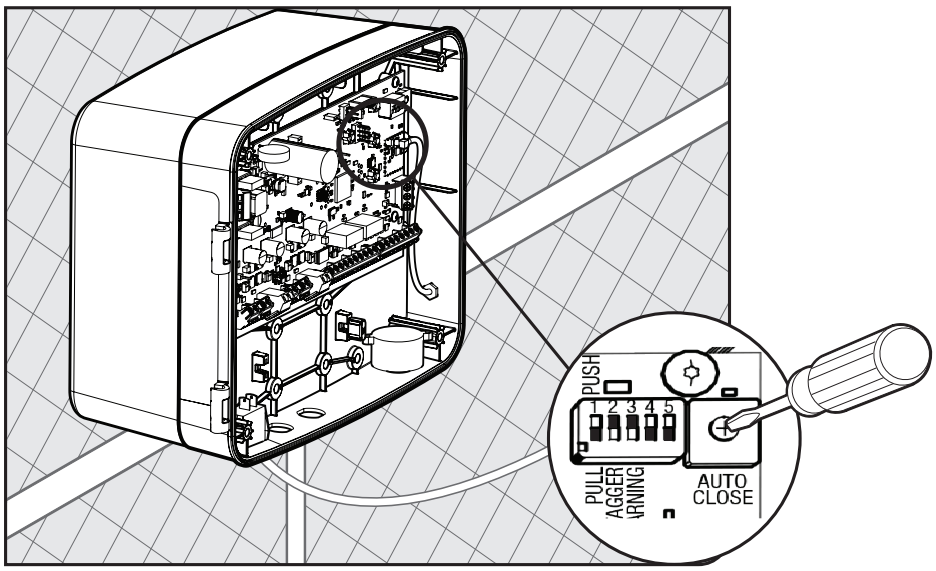

Step 2

- If you have additional accessories or external devices to install, see the following page.
- Unless you have additional external accessories to install, your gate operator installation is now complete.
- Please review the installation checklist at the end of this manual.
- Use a phillips head screwdriver to close the control box.

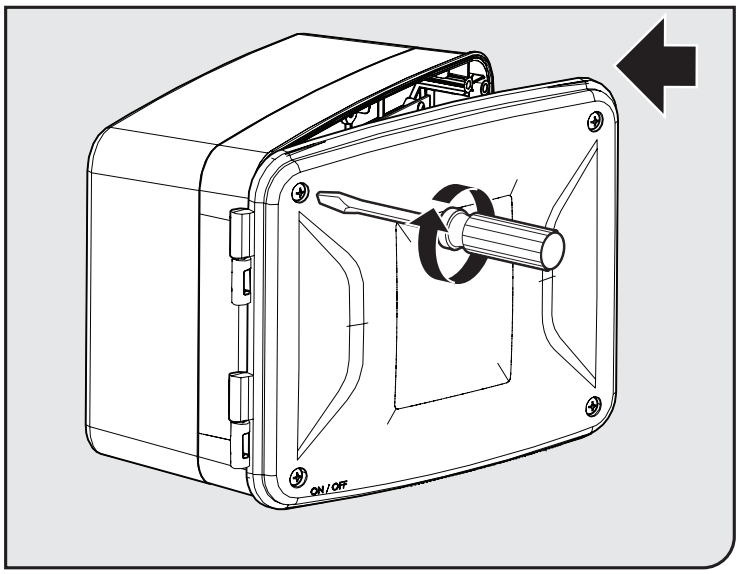

Optional Smart Control Setup

This product has the ability of being control via a smart device (i.e. smartphone) with the addition of the MMS100 smart kit. Refer to the instructions contained in the MMS100 kit or visit www.mightymule.com for more information

Connecting Additional Devices

Mighty Mule strongly recommends the use of additional obstruction detection devices however we do not endorse any specific brand names. Only use products that are listed to be in compliance with any applicable UL safety standards and national and regional codes.

PLEASE NOTE: Contact sensors, non-contact sensors, shadow loops, etc. are not included with this product. Refer to the sensor manufacturer's instructions for information about installing accessory devices.

The Mighty Mule ONLY accepts accessory devices with normally open dry contact outputs.

⚠ WARNING

Make sure the operator power switch is turned OFF before connecting ANY device wiring to the terminals of the controller. Unplugging the transformer does not turn power to the operator off.

Wiring Accessories through Control Board Wiring Knockout

Open the control box cover.

Carefully remove wiring knockout plugs to insert accessory wires.

Insert accessory wires through the knockout and route to the accessory input terminals on the control board.
(See pg. 12)

Close the control box cover.

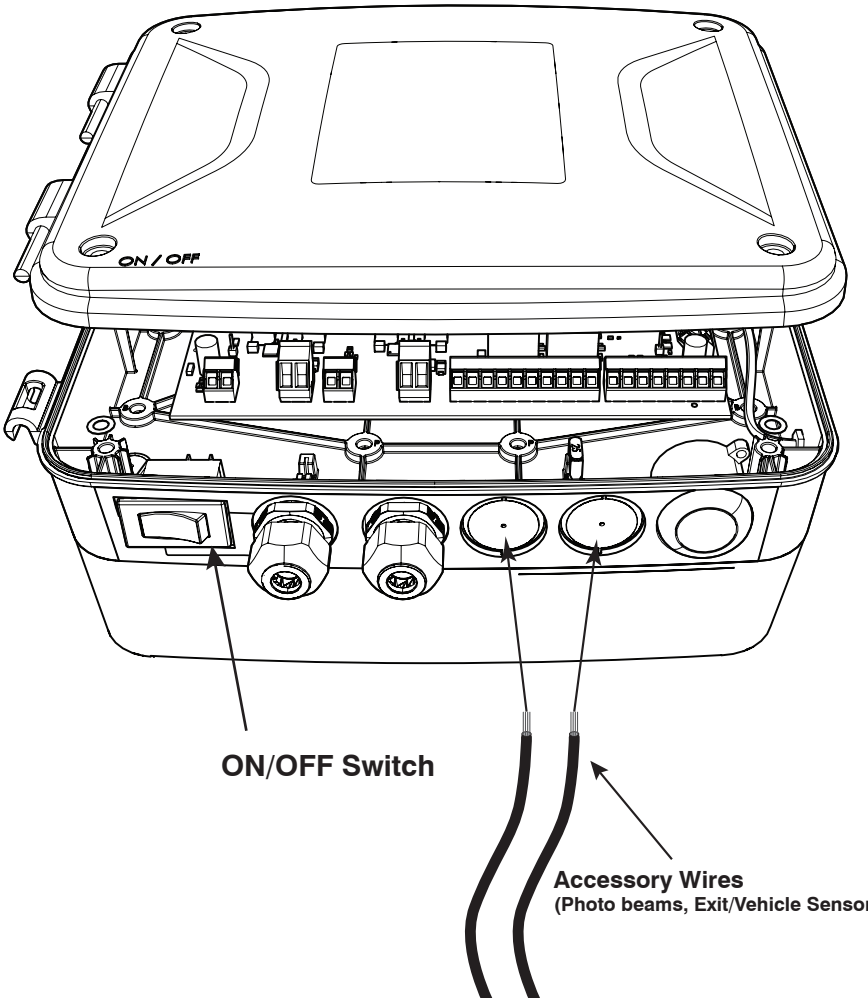

CONTROL BOARD CONNECTIONS

NOTES:

- All ACCESSORY INPUTS (ITEMS 2-6) are dry contact,normally open inputs. DO NOT apply external voltage inputs to these terminals.
- All ACCESSORY INPUTS (ITEMS 2-6) are connected with respect to the COMMON terminals (ITEM 1).

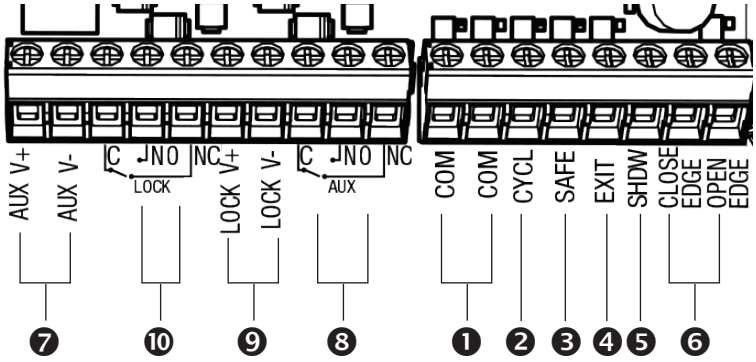

ACCESSORY INPUTS

1 **COM:** Common/Negative terminal for accessory devices and negative wire from solar panel(s).

2 **CYCL:** (Typically for use with doorbell button or hard wired keypad)
- Each activation at this input will cycle the operation as follows:
  ….→ OPEN → STOP → CLOSE → STOP → OPEN → …

3 **SAFE:** (Typically for use with photo beam device,loop detector or other non-contact sensors)
- Activation of this input while the gate is closing, or at a position other than fully open or fully closed will cause the gate to stop and return to the opened position.
- Activation of this input while the gate is opening has no effect. (gate will continue to open)
- Activation of this input while the gate is open will prevent gate from closing.
- Activation of this input while at open limit will restart the auto close time (if enabled).

4 **EXIT:** (Typically for use with exit loop or wand)
- Activation of this input will open the gate if it's not already at the open position.
- Activation of this input while at open limit will restart the auto close time (if enabled).

5 **SHDW:** (Typically for use with loop detector device)
- This input is only monitored when the gate is at the fully open position.
  At any other position, activation of this input has no effect on gate operation.
- Activation of this input while gate at the fully open position will prevent gate from closing.

6 **EDGE:** (Typically for use with contact edge sensor)
- Activation of this input while gate is moving will cause it to reverse direction for 2 seconds.
- Activation of this input while idle will prevent gate from running.

7 **AUX V+ & AUX V-:** These terminals provide constant auxiliary accessory power from the operator's battery, rated for 2 amps MAX. The output is designed to be used in conjunction with the AUX relay, ITEM 8.

NOTE: Using this power output will drain your operator battery. Continuous use greater than 20mA is NOT recommended for solar applications.

LOCK OUTPUTS

8 **AUX C NO NC:** The AUX Relay is triggered during gate operation and remains activated for the duration of the gate operation. The AUX Relay should only be used for switching AUX V-.

9 LOCK V+ & LOCK V-: These terminals are designed for use with the Automatic Gate Lock (FM143). See page 47 of this manual for connection diagrams.

10 **LOCK C NO NC:** The LOCK Relay is designed for use with the Automatic Gate Lock (FM143). This relay is momentarily triggered at the beginning of each gate operation. See page 47 of this manual for connection diagrams. The LOCK Relay should only be used for switching LOCK V-.

NOTE: DO NOT connect positive voltage to the AUX or LOCK Relays.

CONNECTING ACCESSORIES

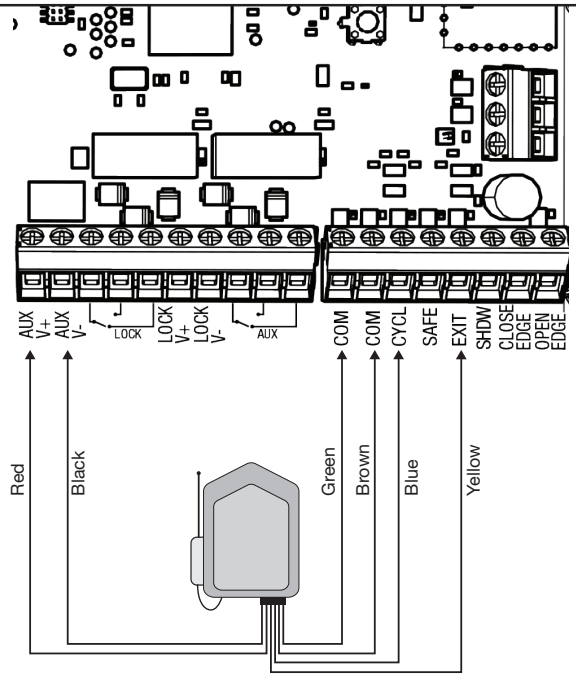

Garage Door Receiver

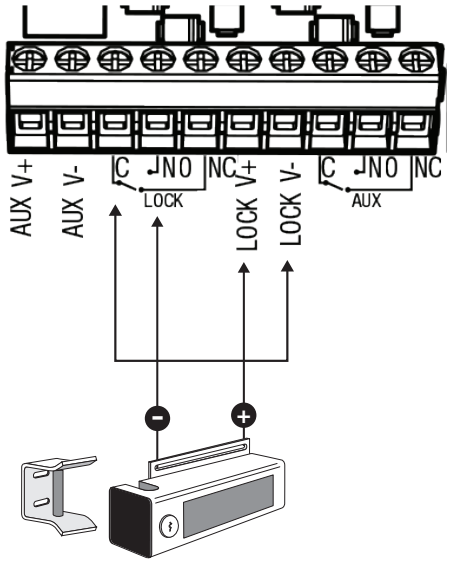

Automatic Gate Lock (FM143)

NOTE: A wire jumper is required between 'LOCK V-' and 'LOCK Relay Common'.

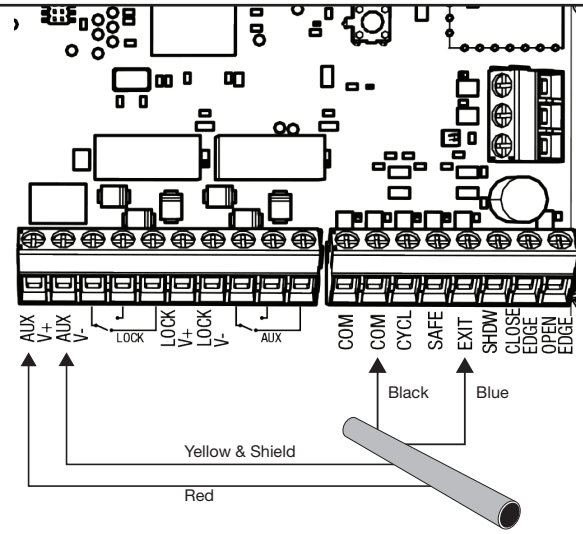

Mighty Mule Vehicle Sensor

Refer to the Vehicle Sensor Manual for additional information if needed.

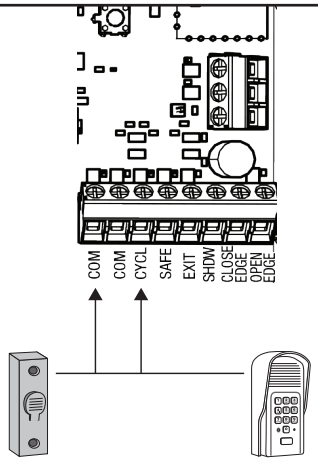

Mighty Mule Push Button Control

Mighty Mule Keypad

NOTE: Connections are for typical applications. For additional connection options not illustrated here refer to the accessory manual for details.

For FM130/FM130-SW and FM136, see Appendix A in this manual.

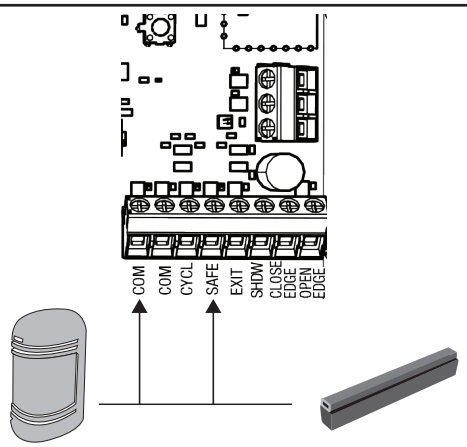

Photo Beams **Edge Sensor**

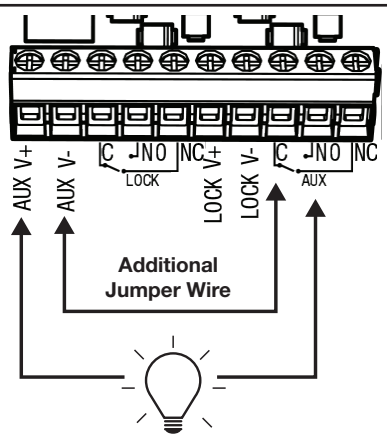

Light Bulb (active while cycling)

Maintenance

- Monthly, test the obstruction and entrapment protection systems.
- Monthly, service the gate operator (make sure the power switch is OFF). Clean extended operator arm with a soft, dry clean cloth.
- On all gates weighing 250 lb. or more, routinely grease the ball bearing hinges at least 4 times a year; more frequently if the gates are near a coastal area.
- Monthly, turn off the power switch and disconnect the Mighty Mule and move the gate to make sure the gate is moving freely without sticking or binding. Lubricate the hinges or repair the gate as required before reattaching the Mighty Mule.
- Monthly, check the gate system for potential entrapments from new landscaping or construction. Eliminate or guard as required.
- Monthly, check that the warning signs are mounted on each side of the gate and clearly visible. Replace the signs if they are missing or damaged.
- Replace batteries every 2-3 years and properly recycle old batteries.

Troubleshooting Guide - Audible Feedback

If your gate operator does not function properly after it is installed, use this guide before calling the Nortek Security & Control Service Department.

Audible Feedback	Possible Diagnosis	Check/Solution
Continuous Alarm	Control Board senses an obstruction or lack of arm movement	➤ Path of gate ➤ Gate for adequate maintenance, free swinging, level and plumb ➤ Adjust Stall Force level ➤ Disconnect obstruction detection devices ➤ 2” clearance not met (see page 17) ➤ Arm power cable connections
1 beep every 10 seconds	Low battery	➤ Check fuses ➤ Battery harness connections ➤ Battery under load or inadequate charge ➤ AC output at 120 Vac, transformer output at 19 Vdc ➤ Solar panel(s) output based on weather conditions ➤ Wiring from charge source to control board, verify correct polarity
2 beeps every 10 seconds	Motor fault	➤ Operator arm(s) connections ➤ Internal motor short ➤ Check fuses ➤ Battery harness connections ➤ Battery under load or inadequate charge
1 beep, pause, 1 beep,……	Open circuit Primary arm	➤ Primary arm connections (white and green) ➤ Arm power cable
2 beeps, pause, 2 beeps,……	Open circuit Secondary arm	➤ Secondary arm connections (white and green) ➤ Arm power cable
3 beeps, pause, 3 beeps,……	Short circuit Primary arm	➤ Primary arm connections (white and green) ➤ Arm power cable
4 beeps, pause, 4 beeps,……	Short circuit Secondary arm	➤ Secondary arm connections (white and green) ➤ Arm power cable
5 beeps, pause, 5 beeps,……	Stuck limit switch Primary Arm or reading open motor circuit	➤ Arm power cable wires shorted, crossed or cut/disconnected
6 beeps, pause, 6 beeps,……	Stuck limit switch Secondary arm or reading open motor circuit	➤ Arm power cable wires shorted, crossed or cut/disconnected

Audible Feedback	Possible Diagnosis	Check/Solution
1 beep, pause, 2 beeps, pause, 1 beep, pause, 2 beeps, pause,.....	Reading primary motor short condition	➤ Turn the system off and back on. ➤ Motor leads shorted ➤ Internal arm problem, or control board problem
1 beep, pause, 3 beeps, pause, 1 beep, pause, 3 beeps, pause,.....	Reading secondary motor short condition	➤ Turn the system off and back on. ➤ Motor leads shorted ➤ Internal arm problem, or control board problem
The unit clicks with no arm movement	Internal motor problem or low battery	➤ Internal arm problem ➤ Check fuses ➤ Battery harness connections ➤ Battery under load ➤ Inadequate charge

Additional information can be found by contacting Nortek Security & Control.

Troubleshooting Guide - Visual Feedback

If your gate operator does not function properly after it is installed, use this guide before calling the Nortek Security & Control Service Department.

	Visual Feedback	Possible Diagnosis	Check/Solution
	The unit does not seem to turn on	Blown fuse(s) Lack of power Power switch	➤ Ensure the unit is switched on ➤ Check fuses ➤ Battery harness connections ➤ Battery under load or inadequate charge
Unit requires powercycle in order to reset the error	LED 2 (red) 1 blink, pause, 1 blink,.....	Cycle (CYCL) terminal shorted	Detach all wires connected to the affected terminal. Turn the system power off and back on. After the start up beep, ensure the system functions as expected. Troubleshoot each accessory that was removed and associated wiring individually.
	LED 2 (red) 2 blinks, pause, 2 blinks,.....	Safety (SAFE) terminal shorted	
	LED 2 (red) 3 blinks, pause, 3 blinks,.....	Exit (EXIT) terminal shorted	
	LED 2 (red) 4 blinks, pause, 4 blinks,.....	Shadow (SHDW) terminal shorted	
	LED 2 (red) 5 blinks, pause, 5 blinks,.....	Close Edge (CLOSE EDGE) terminal shorted	
	LED 2 (red) 6 blinks, pause, 6 blinks,.....	Open Edge (OPEN EDGE) terminal shorted	
	Charge LED rapidly flashing	Unit does not detect the presence of a battery	➤ Check fuses ➤ Battery harness connections ➤ Battery under load or inadequate charge
	Charge LED off	Unit not charging	➤ Check fuses ➤ Battery harness connections ➤ Battery under load or inadequate charge ➤ AC output at 120 Vac, transformer output at 19 Vdc ➤ Solar panel(s) output based on weather conditions ➤ Wiring from charge source to control board, verify correct polarity
	Charge LED Flashing	Battery or Batteries disconnected	Connect battery/batteries

Visual Feedback	Possible Diagnosis	Check/Solution
The unit will not run	1) Closed / open limit(s) not programmed 2) Transmitter not programmed 3) Battery issues 4) Arm problem	➤ Program closed / open limit(s), see pages 39-42 ➤ Program transmitter ➤ Check fuses ➤ Battery harness connections ➤ Battery under load or inadequate charge ➤ Check arm connections to control board, and then turn the system off and back on. If there is a click and no movement, there is an issue with the arm or power cable
The unit stops before reaching the proper open or close position.	Limit position not adjusted/set correctly. The unit is receiving a stop command Hardware not positioned correctly	➤ Reset the extended limit position. Note: if this problem has occurred, make sure the resetting of limit(s) begins with the operator arm fully retracted. Do not spin the tube out by hand in order to attach it to the gate bracket. ➤ Adjust the arm's retracted position by moving or repositioning the hardware. ➤ Adjust the arm hardware (this would correct the retracted position of the arm) ➤ Check for a triggered (stuck) transmitter or accessory by removing batteries from all other wireless accessories.
The unit reverses before completing an open or close.	Gate/unit has sensed an obstruction	➤ Path of gate ➤ Gate for adequate maintenance, free swinging, level and plumb ➤ Adjust Stall Force level ➤ Disconnect obstruction detection devices ➤ 2" clearance not met (see page 17) ➤ Arm power cable connections
The auto close seems to be working in reverse and/or accessories not operating properly	Dip switch 1 in the wrong position, or was not updated by the system	➤ Turn unit off then back on ➤ Move dip 1 to the correct position, and then turn unit off then back on ➤ Check accessories and connections
F1 fuse (top left) blown	Transformer or solar wired to board incorrectly	➤ Correct wiring ➤ Replace fuse
F2 fuse (bottom left fuse) blown	Battery or Batteries connected incorrectly	➤ Check battery connections and harness, ensure the battery is connected red to red (+) and black to black (-) ➤ Replace F2 fuse and harness fuse if blown
Harness fuse blown	Battery or Batteries connected incorrectly	➤ Check battery connections and harness, ensure the battery is connected red to red (+) and black to black (-) ➤ Replace harness fuse and F2 fuse if blown

Additional information can be found by contacting Nortek Security & Control.

Repair Service

If your Mighty Mule Gate Opener is not operating properly, please follow the steps below:

1. First use the procedures found in the **Maintenance & Troubleshooting Guide** (see page 48).
2. For 24 hour 7 days a week trouble shooting and support online go to our TECH WIZARD site at www.mightymule.com
3. If you are unable to solve the problem, call the Tech Service Department at 800-543-1236.
4. If repair or replacement of your gate operator is necessary, the Service Department will assign a Return Authorization (RA) number.
5. Include a copy of your receipt and securely pack the component(s) authorized for return to the factory. Write the RA number issued to you on the outside of the package in LARGE BOLD PRINT. Ship the package(s) freight prepaid to the address provided during the RA process.

NOTE: Products returned to Nortek Security & Control without a Return Authorization (RA) number in LARGE BOLD PRINT on the outside of the package WILL NOT be accepted. Items returned to Nortek Security & Control freight collect WILL NOT be accepted. Items returned without proof of purchase will not be repaired under warranty.

For 24 hour 7 days a week trouble shooting and support online go to our TECH WIZARD site at...
www.mightymule.com

The Mighty Mule Technical Service Department is open
Monday – Friday 8:00 A.M. – 7:00 P.M. (Eastern Time)

Telephone 800-543-1236

Web site: www.mightymule.com

Accessories

Accessories are Available From Your Retail Store

Solar Panel (FM123)
The **Solar Panel** is a 10 watt solar powered battery charger for use with the **Mighty Mule 571W/572W** gate operator systems. Particularly suited for remote installations, each **Solar Panel** comes with tubular steel support, mounting clips, wire connectors, and 10 ft. of low voltage wire [see Low Voltage Wire for additional wire (250' maximum]. The **Mighty Mule** control board has clearly labeled terminal connections for easy installation of the **Solar Panel**. Installation in some regions of the world will require multiple solar panels for adequate charging power (30 watt max).

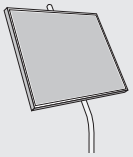

Wireless Transmitter (MMT103)
The MMT103 Code Safe digital transmitter is a wireless radio control designed for use with Mighty Mule garage door openers and can also be programmed to your Mighty Mule gate openers. One remote for two or three devices.

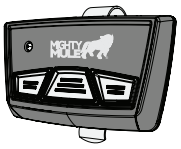

Pin Lock (FM133)
The **Pin Lock** substitutes for the clevis pin at the front end of the Mighty Mule gate operators. Helps prevent theft of the operator from the gate, while allowing quick release of the operator.

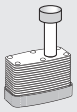

Wireless Driveway Vehicle Sensor (FM130)
Automatically activates gate operator "Hands-Free" when a vehicle exits the property. 100 ft. range between transmitter and receiver. Easy installation.

Wireless Connectivity System (MMS100)
Adds smart functionality to your gate operator utilizing the Mighty Mule App.

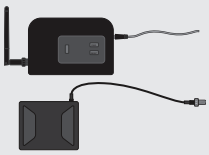

Wireless Keypad (MMK200)
The Mighty Mule Wireless Keypad is designed to control access to all Mighty Mule Garage Door Openers. This keypad features a LED back light that allows you to see numeric keys throughout dark or unfavorable weather conditions.

Mounting Post (FM100) - In Ground
This black powder coated pedestal is designed to provide convenient access to your keypad, wireless intercom, or other access control device from your vehicle. With its break down design it is easy to install and works well in most standard applications. Surface Mount Flanges (F102) and Extensions (F103) for added height are available.

Mighty Mule Vehicle Sensor (FM138)
The Gate Opening Sensor is designed for residential and agricultural applications and is compatible with most Mighty Mule automatic gate operator models. The Sensor is an electromagnetic sensor, which offers 'hands free' operation of the Mighty Mule Gate Operator with a 12 ft. radius of detection of vehicles in motion.

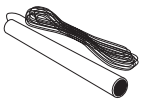

Automatic Gate Lock Pull-to-Open (FM143)
A MUST for added security. Solenoid driven, with a steel housing. Used with **Mighty Mule** DC swing gate operating systems for maximum stability and security. Comes with a keyed manual release.

Replacement Transformer (RP1010)
19V, 2A, DC transformer for maintaining the battery with the **Mighty Mule** gate operator.

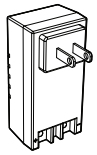

Push Button Control (FM132)
Unlit doorbell button for remote entry or exit control. Wires directly to the control board and uses 16-22 gauge stranded, dual conductor low voltage wire (sold separately).

Low Voltage Wire (RB509-50 = 50' **/ RB509-100** = 100' **/ RB509-250** = 250' **/ RB509-500** = 500'**)**
The 16 gauge, stranded, dual conductor **Low Voltage Wire** is for connecting the AC powered transformer, or the **Solar Panel** to the control board. Also used for the connection of accessories, such as locks, keypads, push buttons and other wired control devices. This specially designed wire is UV treated, PVC coated and ready for direct burial. Available in 1000' rolls or special lengths.

Wireless Entry Intercom / Keypad (MM136)
Allows owner to screen guest at the gate before allowing access to the property. Keypad also allows owner to give up to 25 programmable entry codes to family, friends or approved delivery personnel. Codes can be permanent or temporary. Up to 500 feet reception.

Additional base stations available, up to four total. **(MM136B)**

Garage Door Receiver (RB709U-NB)
The Garage Door Receiver allows you to use the same **Mighty Mule** entry transmitter to operate your gate operator and your garage door operator. Compatible with most garage door operators (not compatible with the MMK200).

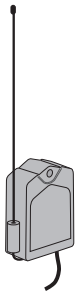

Driveway Alarm (FM231)
This device alerts you of vehicles entering your driveway (with or without an automated gate). The indoor base station signals you with a door chime when a vehicle passes the driveway sensor.

Key Chain Two Button Transmitter (FM134)
The Key Chain Transmitter is a dual button version of the Mighty Mule single button entry transmitter and has the same adjustable code settings. Used for 2 gates or 1 gate and garage door (when used with in conjunction with a garage door receiver – RB709U-NB). (Battery is included).

Single Button Transmitter (FM135)
The **Mighty Mule** entry transmitter, with adjustable code settings, is standard equipment with all **Mighty Mule** systems. (Battery is included.)

If you have a question about any special order item, call Customer Service: 1-800-543-4283

The contents of all material available on this installation manual are copyrighted by Nortek Security & Control, LLC ("Nortek Security & Control"), unless otherwise indicated. All rights are reserved by Nortek Security & Control, and content may not be reproduced, downloaded, disseminated, published, or transferred in any form or by any means, except with the prior, written permission of Nortek Security & Control. Any reprinting of Nortek Security & Control publications is by permission only. Copyright infringement is a violation of federal law.

Mighty Mule®, E-Z Gate®, Nortek Security & Control®, "Dual Sense Technology" are registered trademarks of Nortek Security & Control, LLC, America's DIY Automatic Gate Openers is a trademark of Nortek Security & Control, LLC and are the exclusive property of Nortek Security & Control, LLC ("Nortek Security & Control").
All rights are reserved by Nortek Security & Control, and these marks may not be used, in any for without the prior, written permission of Nortek Security & Control.

Appendix A

ACCESSORY INSTALLATION INSTRUCTIONS

FM130 Installation

FM130

For the FM130 to function, the "Transmitter Module" must be programmed to your gate operator's control board.

Before you begin:

- Ensure the gate operator is in the OPEN position.
- Check to ensure the PUSH-PULL DIP setting is correct (see page 14 and pages 39-42). If you have to change this DIP setting, turn the unit OFF then ON to save setting.
- Ensure the AUTOCLOSE is set to OFF.

Step 1: Choose a random dip switch setting on the Transmitter Module.

Step 2: On the gate operator control board, press and hold the (↵, S3) button until LED2 illuminates and the buzzer sounds. Release the button.

Step 3: Insert both batteries into the transmitter module. The transmitter module will begin transmitting.

Step 4: Once Learned, LED2 will flash and the buzzer will sound indicating that the Transmitter Module has been learned. Remove the AA batteries from the Transmitter Module, and proceed with the rest of the installation following the accessory instructions.

Notes:

1. If you need to erase this device, repeat steps 2-4 above.
2. Erasing all transmitters on the gate operator control board will erase this device.
3. AUTOCLOSE may be turned back on after setup is complete.

FM136 Installation

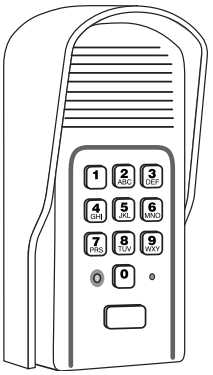

As an alternative to the instructions provided with the FM136, the keypad can be learned to your gate operator as an additional transmitter by following these instructions:

Step 1: Choose a random DIP setting on the keypad unit. Refer to the FM136 manual for the location of the DIP switches.

Step 2: On the gate operator control board, press and hold the (↵, S3) button until LED2 illuminates and the buzzer sounds. Release the button.

Step 3: Enter your MASTER CODE on the FM136 keypad (1-2-3-4 is the default unless changed). Once learned, LED2 will flash and the buzzer will sound on the gate operator control board. Proceed with installation of the FM136 per the accessory instructions.

Notes:

1. If you need to erase this device, repeat steps 2-3 above.
2. Erasing all transmitters on the gate operator control board will erase this device.

Gate Operator Installation Checklist

❑	1.	The gate has been checked to make sure it is level and moves freely in both directions.
❑	2.	Potential pinch areas have been guarded so as to be inaccessible OR have sensing edges and/or photo beam obstruction detection devices installed.
❑	3.	The installer has installed one or more contact or non-contact obstruction sensing devices, if required for this installation.
❑	4.	If pedestrian traffic is expected, a separate pedestrian gate has been installed, a minimum of seven feet from the gate system. All pedestrian traffic must use the pedestrian gate.
❑	5.	Warning signs have been installed on each side of the gate in highly visible locations. These signs must remain at all times.
❑	6.	There are no controls installed on the gate operator, or within 10 feet of the gate.
❑	7.	The Dual Sense Technology™ feature has been properly adjusted to the minimum operational setting for your application.
❑	8.	Reviewed and understand all of the operational functions, obstruction sensing devices, warning beeper and reset, etc.
❑	9.	Review and understand the proper use of the operator's manual disconnect feature. The manual disconnect must never be used while the gate is in motion. The power switch must be turned off before using the manual disconnect and disengaging the operator.
❑	10.	Reviewed all safety instructions, and keep the safety instructions and owner's information sheets for reference.
❑	11.	Review and understand the maintenance schedule for both the gate and the gate operator.

MIGHTY MULE®

Telephone Mighty Mule Sales: (800) 543-4283
or Mighty Mule Technical Service: (800) 543-1236
www.mightymule.com

NORTEK CONTROL

The contents of all material available on this installation manual are copyrighted by Nortek Security & Control, LLC ("Nortek Security & Control"), unless otherwise indicated. All rights are reserved by Nortek Security & Control, and content may not be reproduced, downloaded, disseminated, published, or transferred in any form or by any means, except with the prior, written permission of Nortek Security & Control. Any reprinting of Nortek Security & Control publications is by permission only. Copyright infringement is a violation of federal law.

Mighty Mule®, E-Z Gate®, NSC®, "Dual Sense Technology" are registered trademarks of Nortek Security & Control, LLC, America's DIY Automatic Gate Openers is a trademark of Nortek Security & Control, LLC and are the exclusive property of Nortek Security & Control, LLC ("Nortek Security & Control").
Copyright© 2021 Nortek Security & Control, LLC. All rights are reserved by Nortek Security & Control, and these marks may not be used, in any for without the prior, written permission of Nortek Security & Control.